The RANS CD manual is designed to be printable on 3-hole punched paper on your home printer. If you have the pre-printed manual, follow the directions for rotation below.

If you desire to NOT print the pages, you may use the features available with ADOBE Reader to rotate the pages on your computer screen.

After the manual pages are printed, rotate the Parts Drawing page 180° to face the Parts List page. See the diagram below.

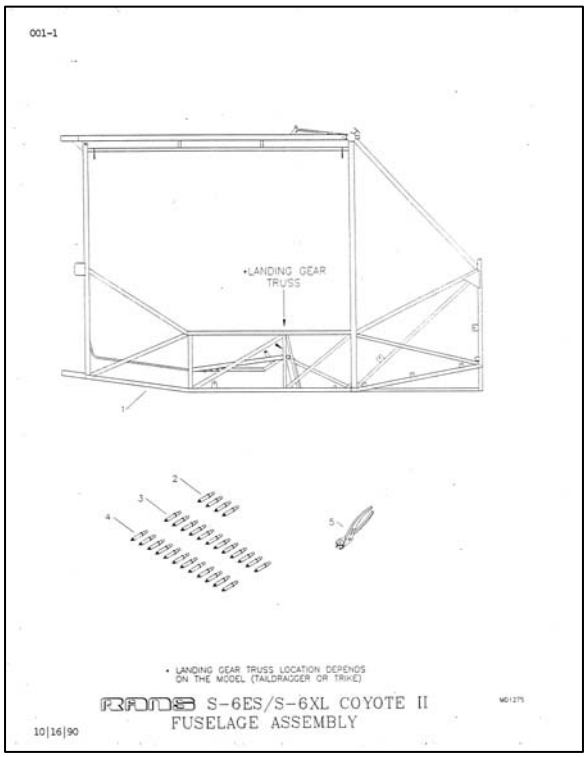

Parts Drawing page

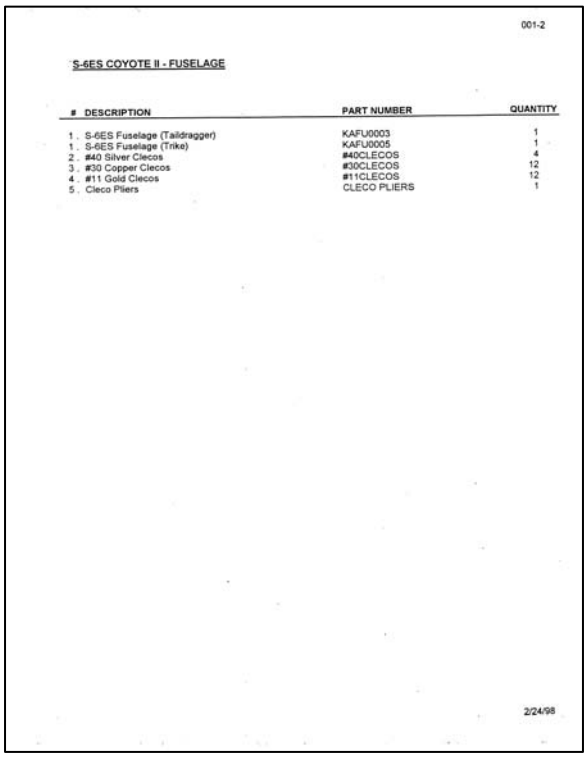

001-2

S-6ES COYOTE II - FUSELAGE

#	DESCRIPTION	PART NUMBER	QUANTITY
1.	S-6ES Fuselage (Taildragger)	KAFU0003	1
1.	S-6ES Fuselage (Trike)	KAFU0005	1
2.	#40 Silver Clecos	#40CLECOS	4
3.	#30 Copper Clecos	#30CLECOS	12
4.	#11 Gold Clecos	#11CLECOS	12
5.	Cleco Pliers	CLECO PLIERS	1

2/24/98

Parts List page

STEP 1:

PARTS MANUAL AS SHIPPED or PRINTED.
PLACE IN 3-RING BINDER TO SECURE.

PARTS DRAWING PAGE

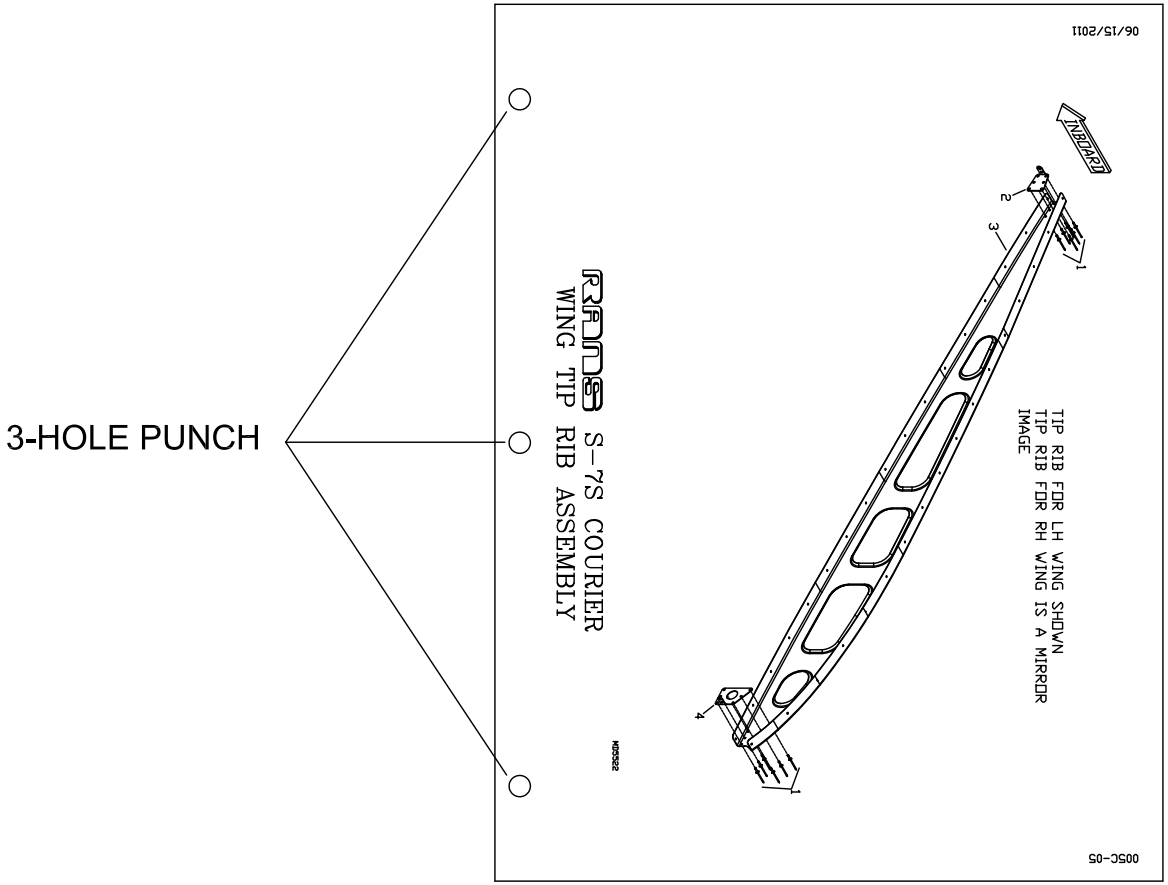

3-HOLE PUNCH

EXAMPLE ONLY.
MAY NOT REPRESENT ACTUAL PAGES
FROM YOUR MANUAL.

SEE NEXT PAGE

STEP 2:

OPEN 3-RING BINDER.
REMOVE PARTS DRAWING PAGE AND
ROTATE 180° TO FACE
CORRESPONDING
PARTS DESCRIPTION PAGE.
REPEAT FOR REMAINING PAGES

PARTS DRAWING PAGE

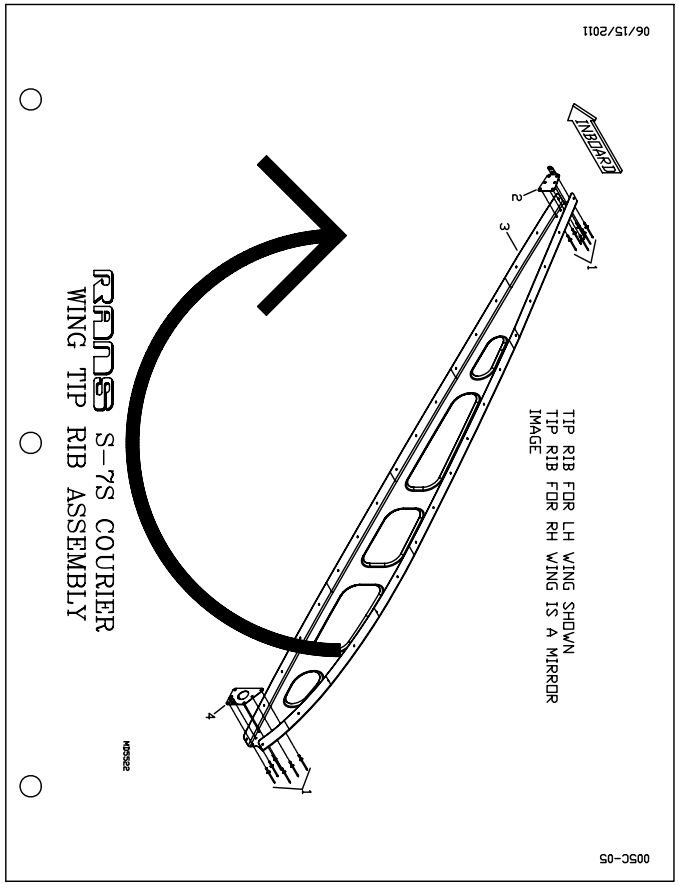

PARTS DESCRIPTION PAGE

PAGE 005C-06

S-7S COURIER - WING - TIP RIB ASSEMBLY

# DESCRIPTION	PART NUMBER	QUANTITY
1. 1/8" ALUMINUM RIVET	AAPQ-41	24
2. RIB CLIP TRAILING EDGE - LH	KPWI0372-L	4
2. RIB CLIP TRAILING EDGE - RH	KPWI0372-R	1
3. WING TIP RIB - LH	KPWI0544-L	1
3. WING TIP RIB - RH	KPWI0544-R	1
4. RIB CLIP LEADING EDGE - LH	KPWI0373-L	1
4. RIB CLIP LEADING EDGE - RH	KPWI0373-R	1

6/15/2011

EXAMPLE ONLY.
MAY NOT REPRESENT ACTUAL PAGES
FROM YOUR MANUAL.

SEE NEXT PAGE

STEP 3:

PARTS DRAWING PAGE
FACES CORRESPONDING
PARTS DESCRIPTION PAGE
WHEN FINAL SECURED IN
BINDER

PARTS DRAWING PAGE

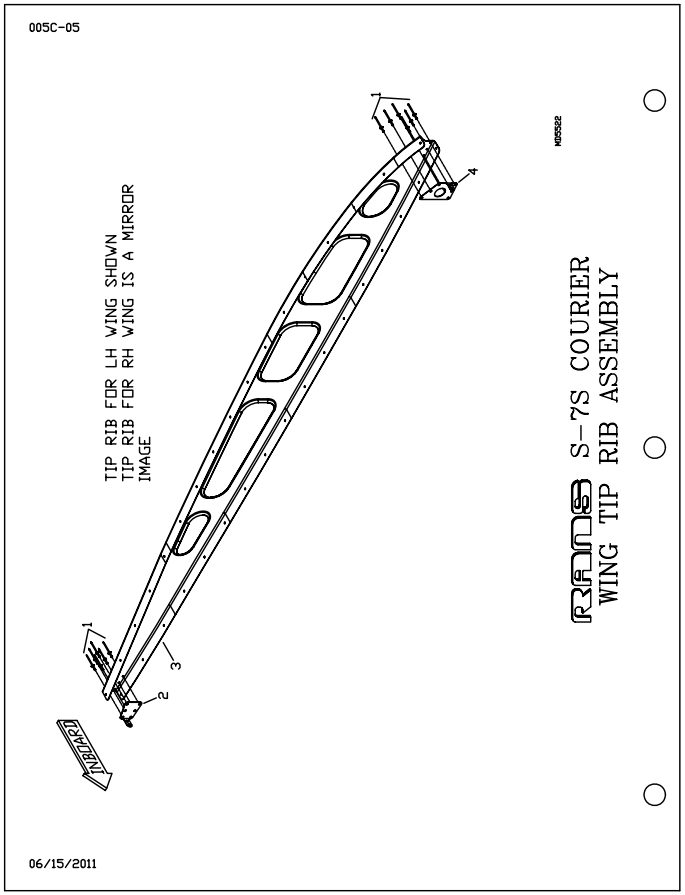

PARTS DESCRIPTION PAGE

PAGE 005C-06

S-7S COURIER - WING - TIP RIB ASSEMBLY

#	DESCRIPTION	PART NUMBER	QUANTITY
1.	1/8" ALUMINUM RIVET	AAPQ-41	24
2.	RIB CLIP TRAILING EDGE - LH	KPWI0372-L	4
2.	RIB CLIP TRAILING EDGE - RH	KPWI0372-R	1
3.	WING TIP RIB - LH	KPWI0544-L	1
3.	WING TIP RIB - RH	KPWI0544-R	1
4.	RIB CLIP LEADING EDGE - LH	KPWI0373-L	1
4.	RIB CLIP LEADING EDGE - RH	KPWI0373-R	1

6/15/2011

EXAMPLE ONLY.
MAY NOT REPRESENT ACTUAL PAGES
FROM YOUR MANUAL.

S-18 Stinger - General Information

#	DESCRIPTION	PART NUMBER	QUANTITY
1.	Flight Log Book	FLIGHT LOG	1
2.	Maintenance Log Book	MAINTENANCE LOG	1
3.	Assembly Manual	ASSEMBLY MANUAL(18)	1
4.	Text Manual	TEXT MANUAL(18)	1
5.	Figure Manual	FIGURE MANUAL(18)	1
6.	Raw Stock Kit	KAAC0038	1
6.	7/8" x .058 x 60" Anodized Aluminum Tubing	KAAC0038-1	1
6.	3/8" x .058 x 10" Anodized Aluminum Tubin	KAAC0038-2	1
6.	1" x .049 x 105" Anodized Aluminum Tubing	KAAC0038-3	1
6.	1 1/8" x .058 x 6" Anodized Aluminum Tubing	KAAC0038-4	1
6.	1/4" x .028 x 24" Anodized Aluminum Tubing	KAAC0038-5	1
6.	1/2" x .035 x 288" Anodized Aluminum Tubing	KAAC0038-6	1
6.	1" x 1" x 2 1/2" PVC	KAAC0038-8	1
6.	3/4" x .050 x 30" Aluminum Strip	KAAC0038-9	1
6.	3/8" x .035 x 4" Anodized Aluminum Tubing	KAAC0038-10	1
7.	#30 Copper Clecos	#30CLECOS	12
8.	Cleco Pliers	CLECO PLIERS	1
9.	S-18 Stinger Tail Logo Decal	KPPL0005	2
10.	Warning Label	KPPL0001	1
11.	Safety Wire	SAFETY WIRE	1
12.	Loctite Blue	LOC-TITE	1
13.	Rans S-18 Decal	KPPL0004	2
14.	Range Decals	RANGE DECAL	1
15.	Experimental Decal Sheets	EXPER-DECAL	1

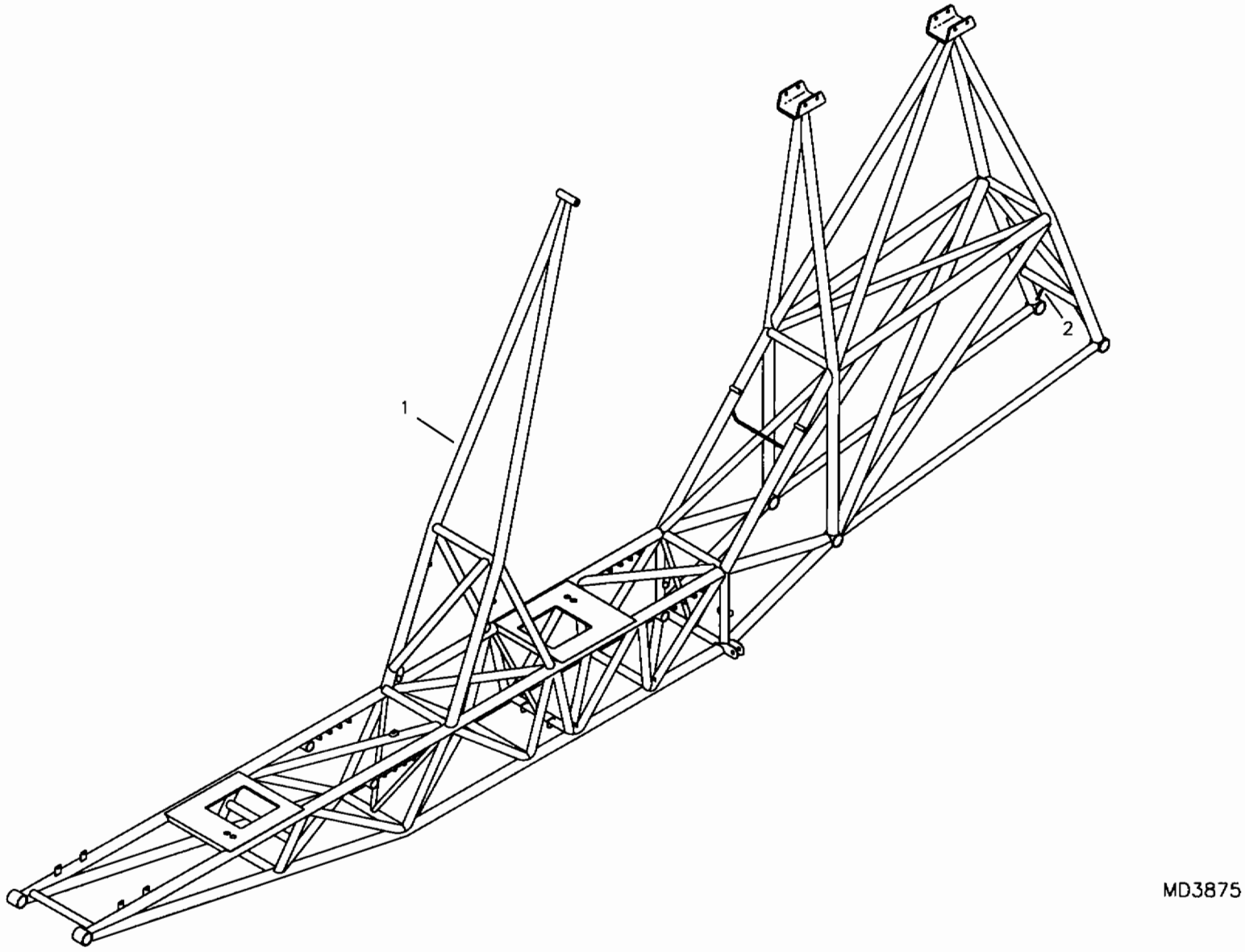

RANS S-18 STINGER II
FUSELAGE

S-18 Stinger - Fuselage

#	DESCRIPTION	PART NUMBER	QUANTITY
1.	Fuselage	KAFU0032	1
2.	Serial Number Location	-----	0

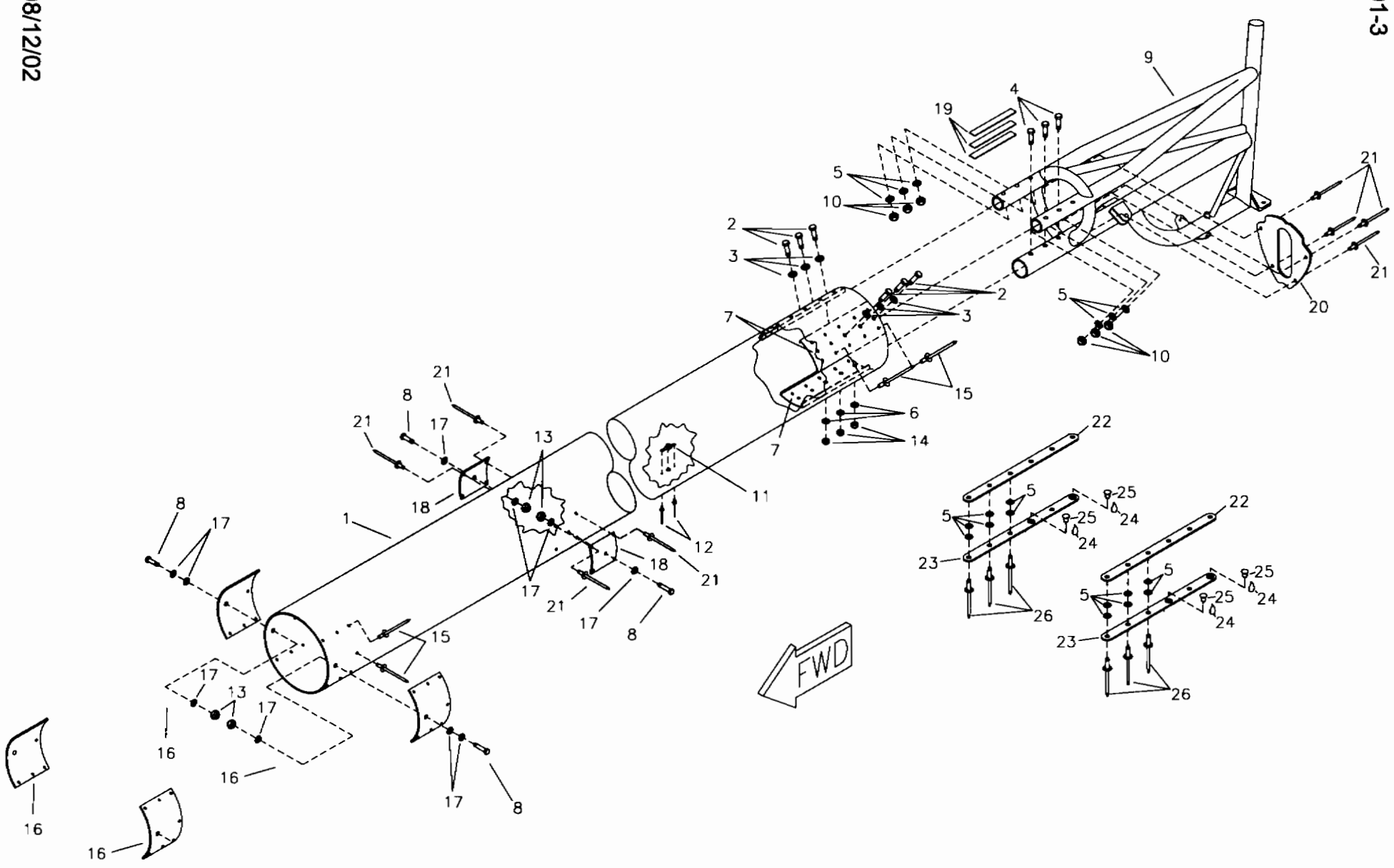

RANS S-18 STINGER II
TAIL BOOM ASSEMBLY

MD3879

S-18 Stinger - Tail Boom Assembly

#	DESCRIPTION	PART NUMBER	QUANTITY
1.	S-18 Tailboom Assembly	KAFU0042	1
2.	3/16" Bolt	AN3-11A	6
3.	3/16" Thin Washer	AN960-10L	6
4.	1/4" Bolt	AN4-13A	3
5.	3/16" Thick Washer	AN960-10	18
6.	1/4" Thin Washer	AN960-416L	3
7.	AFT Boom Doubler	KPFU0311	3
8.	5/16" Bolt	AN5-7A	4
9.	S-18 Tailboom Extension	KPFU0315	1
10.	3/16" Shear Nut	AN364-1032A	6
11.	3/16" Nut Plate	K-1000-3	1
12.	3/32" Aluminum Pop Rivet	40APR1/8	2
13.	5/16" Shear Nut	AN364-524A	4
14.	1/4" Shear Nut	AN364-428A	3
15.	1/8" Stainless Steel Pop Rivet - Cherry Q	CCPQ-42	47
16.	FWD Boom Doubler	KPFU0303	2
17.	5/16" Thick Washer	AN960-516	10
18.	AFT Boom Doubler	KPFU0304	2
19.	Aluminum Shim, 3/4" x .050 x 8" *	KAAC0038-9	0
20.	Elevator Push Pull Tube Guide	KPFU0330	1
21.	1/8" Stainless Steel Pop Rivet - Cherry Q	CCPQ-44	12
22.	Tail Extension Hole Finder - Upper	KPHS0039	2
23.	Tail Extension Hole Finder - Lower	KPHS0040	2
24.	Epoxy	-----	0
25.	3/16" Flush Rivet	MS20426A-6-5	4
26.	3/16" Aluminum Pop Rivet	12SSPR3/8	6

*Builder must fabricate from Raw Stock.

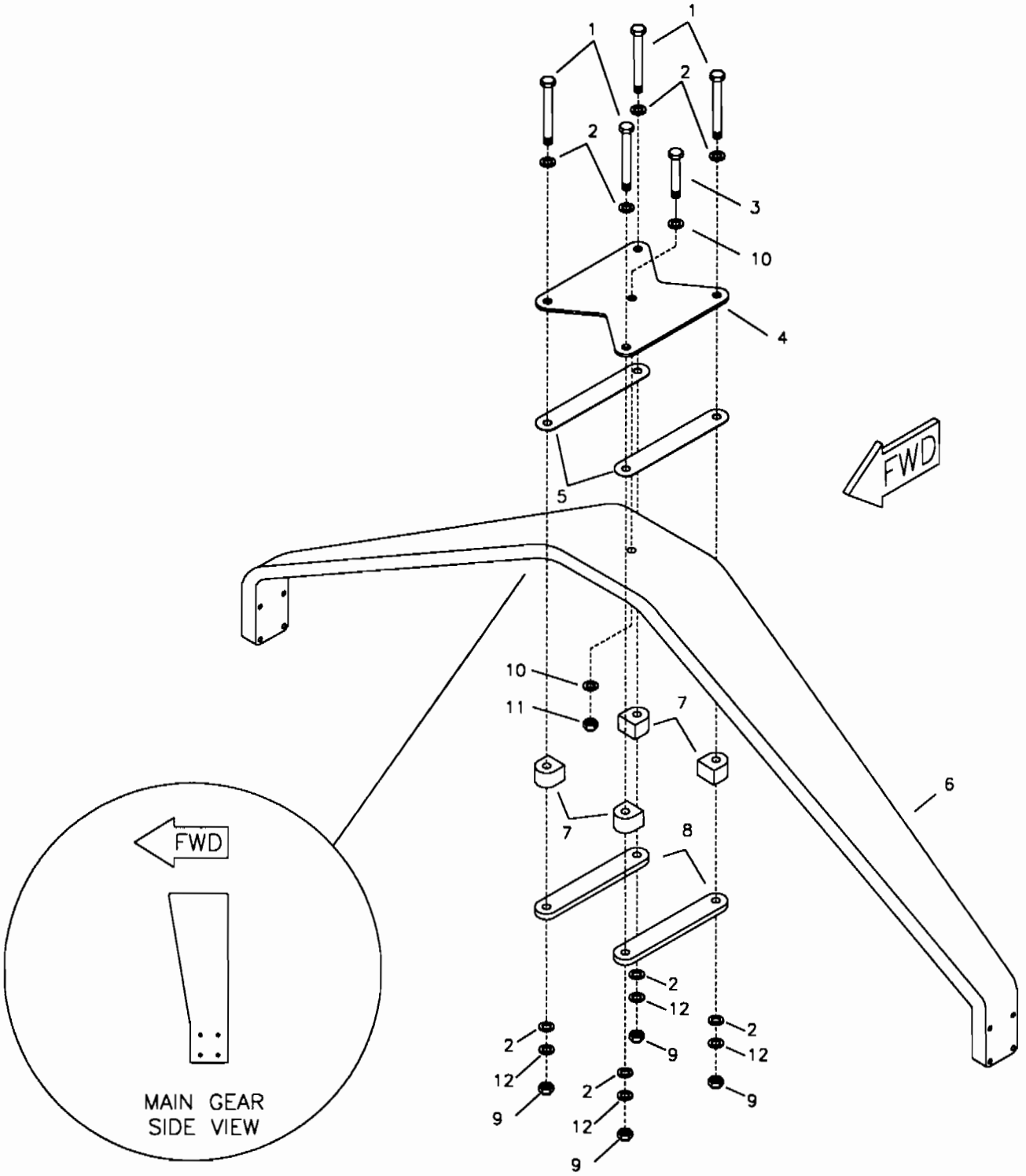

MD3874

RANS S-18 STINGER II
MAIN GEAR ASSEMBLY

S-18 Stinger - Main Gear Assembly

#	DESCRIPTION	PART NUMBER	QUANTITY
1.	5/16" Bolt	AN5-31A	4
2.	5/16" Thin Washer	AN960-516L	16
3.	3/16" Bolt	AN3-13A	1
4.	Gear Tension Strap	KPMG0138	1
5.	Anti-Chafe Strips, Main Gear	KPMG0142	2
6.	S-18 Aluminum Leaf Gear	KSMG0018	1
7.	Spacer Block, Leaf Gear	KPMG0136	4
8.	Gear Clamp Bar	KPMG0135	2
9.	5/16" Tensile Nut	AN365-524A	4
10.	3/16" Thin Washer	AN960-10L	2
11.	3/16" Shear Nut	AN364-1032A	1
12.	5/16" Thick Washer	AN960-516	4

*Supplied pre-assemblied with KSBS0026.
**Supplied pre-assembled with KSMG0020.
***Builder must fabricate from Raw Stock, or modify.

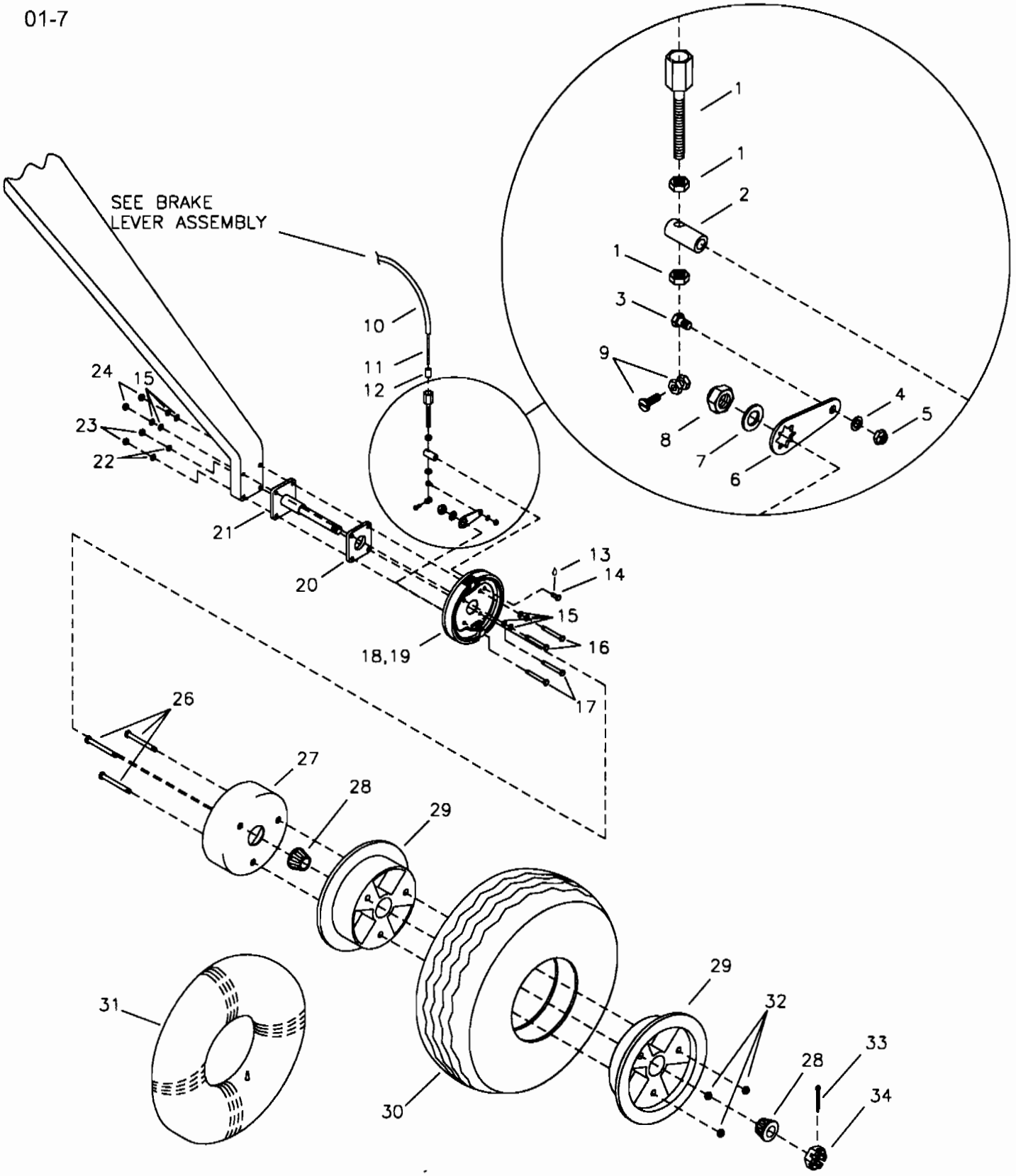

RANS S-18 STINGER II
MECHANICAL BRAKE ASSEMBLY

S-18 Stinger - Mechanical Brake Assebmbly

#	DESCRIPTION	PART NUMBER	QUANTITY
1.	Adjustable Cable Ferrule	2373	2
2.	Insert Nut *	I-NUT	2
3.	1/4" Bolt - Drilled Head	AN4H4A	2
4.	1/4" Thin Washer	AN960-416L	2
5.	1/4" Shear Nut	AN364-428A	2
6.	Brake Arm **	KSBS0026-4	0
7.	5/16" Loc-Washer **	KSBS0026-2	0
8.	5/16" Course Thread Loc Nut **	KSBS0026-3	0
9.	Wire Stop / Screw	2360	2
10.	Cable Housing	B-CH	16 ft
11.	Brake Wire	TR-PW	16 ft
12.	Cable Conduit Ferrule End Cap	80-0002-01	2
13.	Loctite Blue	LOC-TITE	0
14.	1/4" Bolt	AN4-5A	2
15.	5/16" Thick Washer	AN960-516	8
16.	5/16" Bolt	AN5-22A	4
17.	3/8" Bolt	AN6-22A	4
18.	5" Brake Kit	KSBS0026	2
19.	Brake Shoe & Pad **	KSBS0026-1	0
20.	Brake Spacer Block ***	KSMG0020-2	0
21.	Axle ***	KSMG0020-1	0
22.	3/8" Thick Washer	AN960-616	4
23.	3/8" Tensile Loc Nut	AN365-624A	4
24.	5/16" Tensile Nut	AN365-524A	4
25.	3/4" Axle Kit	KSMG0020	2
26.	Bolt ****	KSMG0019-2	0
27.	5" Drum	KSBS0025	2
28.	Bearing & Seal ****	KSMG0019-4	0
29.	Wheel Halve ****	KSMG0019-1	0
30.	6" Tundra Tire	KSMG0002	2
31.	6" Tundra Tire Tube	KSMG0003	2
32.	Nut ****	KSMG0019-3	0
33.	Pin ***	KSMG0020-4	0
34.	Nut ***	KSMG0020-3	0
35.	6" Wheel Kit	KSMG0019	2

*Builder must modify.
**Supplied pre-assembled with KSBS0026.
***Supplied pre-assembled with KSMG0020. ****Supplied pre-assembled with KSMG0019.

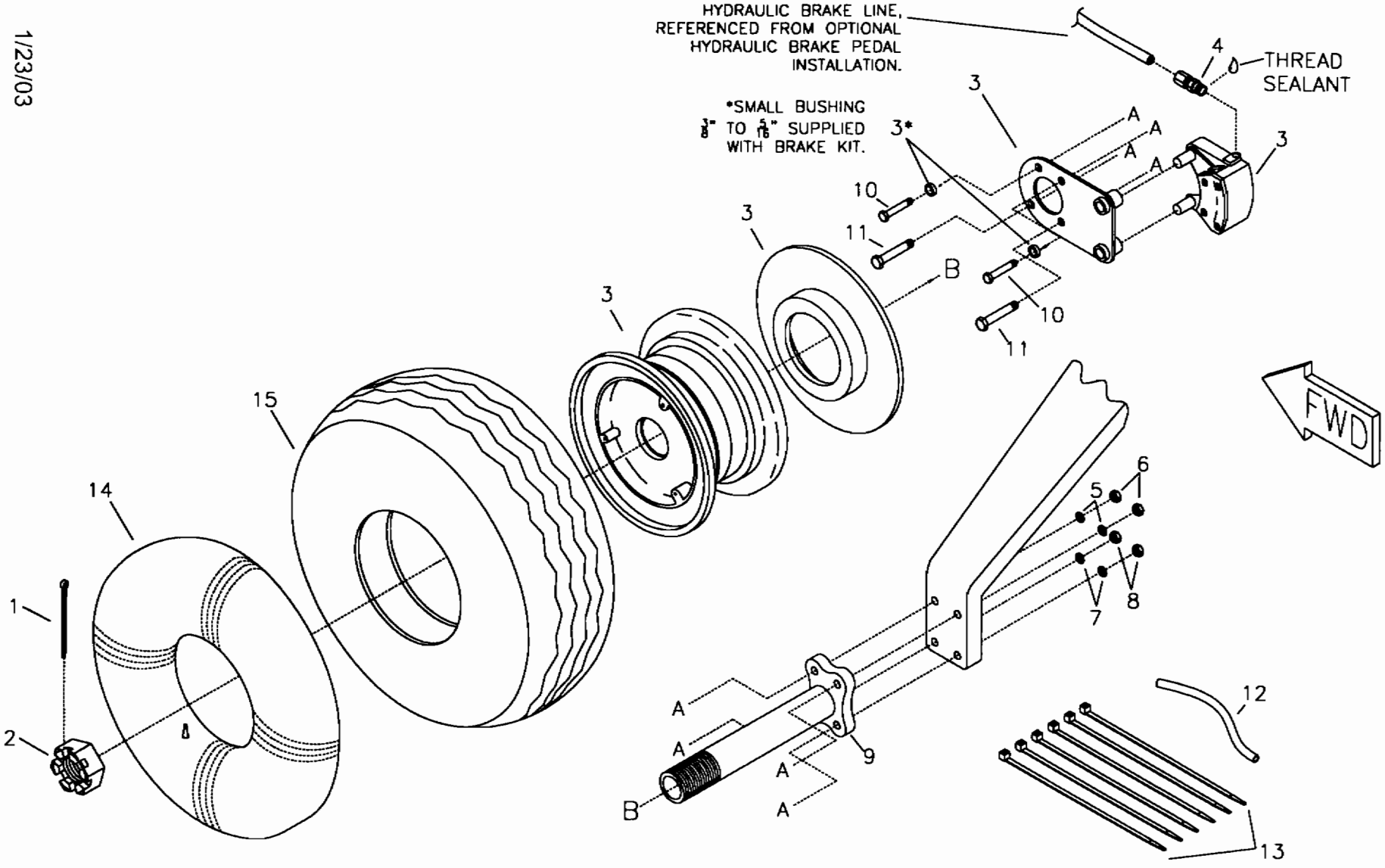

MD4448

RANS S-18 STINGER II
OPTIONAL HYDRAULIC BRAKE INSTALLATION

S-18 Stinger - Optional Hydraulic Brake Installation

#	DESCRIPTION	PART NUMBER	QUANTITY
1.	Cotter Pin	MS24665-360	2
2.	Castle Nut 1 1/2 x 6	MS21025-24	2
3.	6" Wheel & Brake Kit	KSMG0017	2
4.	Straight Fitting	KSBS0002	2
5.	5/16" Thick Washer	AN960-516	4
6.	5/16" Tensile Nut	AN365-524A	4
7.	3/8" Thin Washer	AN960-616L	4
8.	3/8" Tensile Nut	AN365-624A	4
9.	Axle-Main Gear	KPMG0124	2
10.	5/16" Bolt	AN5-22A	4
11.	3/8" Bolt	AN6-22A	4
12.	1/4" Blue Fuel Line	FS-FL	3 in
13.	Long Zip Tie	LG-N-TIE	6
14.	6" Tundra Tire Tube	KSMG0003	2
15.	6" Tundra Trie	KSMG0002	2

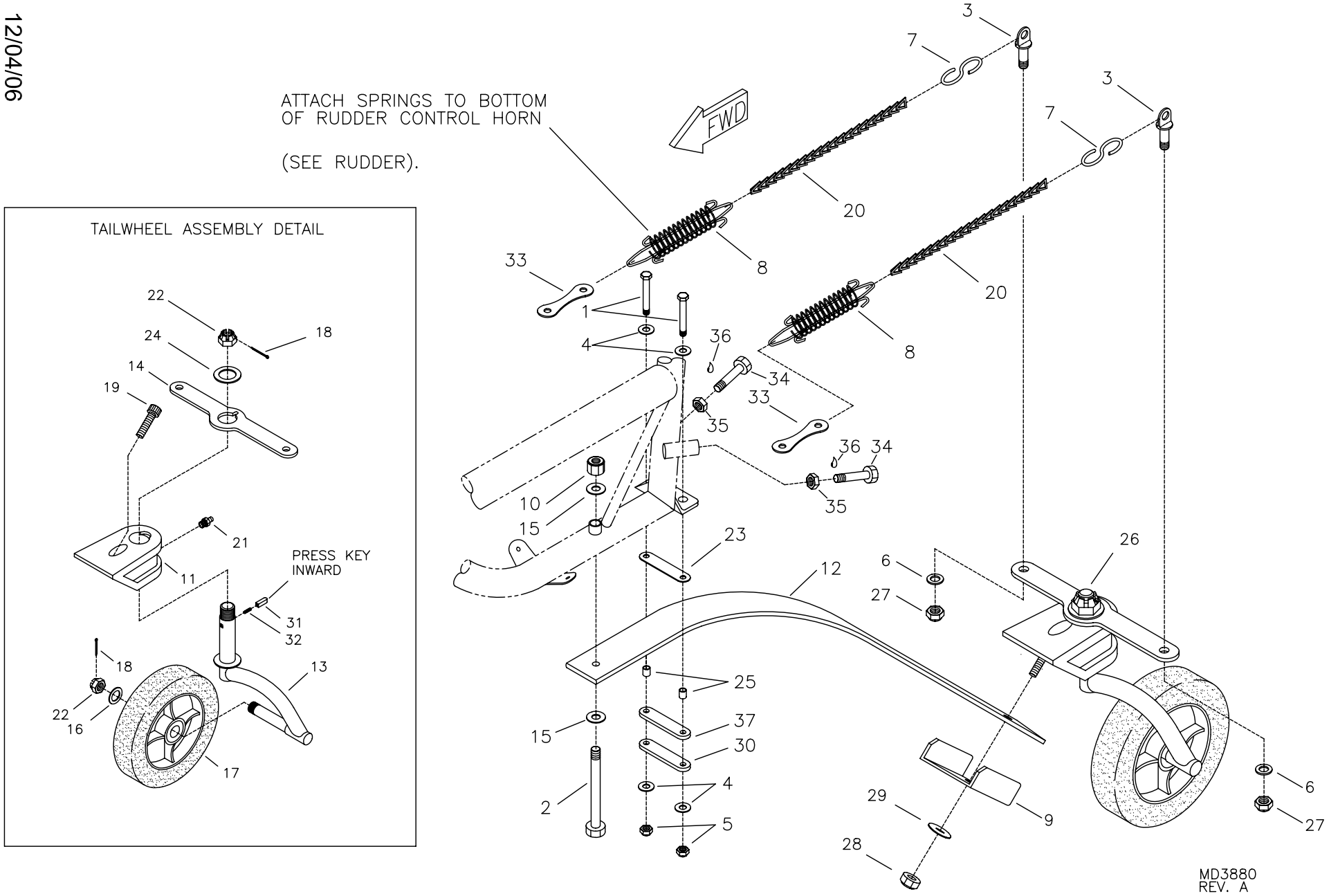

RANS S-18 STINGER II
TAILWHEEL ASSEMBLY & INSTALLATION

S-18 Stinger - Tail Wheel Assembly and Installation

#	DESCRIPTION	PART NUMBER	QUANTITY
1.	3/16" Bolt	AN3-12A	2
2.	5/16" Bolt	AN5-22A	1
3.	1/4" Eyebolt	AN43B-5A	2
4.	3/16" Thick Washer	AN960-10	4
5.	3/16" Tensile Nut	AN365-1032A	2
6.	1/4" Thick Washer	AN960-416	2
7.	"S" Hook	TW-SHOOK	2
8.	Return Spring	TW-S-SPR	2
9.	Tailwheel - Spring Mount Channel *	KPTG0007	1
10.	5/16" Tensile Nut	AN365-524A	1
11.	Tailwheel - Swivel Block *	KPTG0003	1
12.	Tail Spring	KPTG0024	1
13.	Tailwheel - Fork *	KPTG0005	1
14.	Tailwheel - Steer Horn *	KPTG0004	1
15.	5/16" Thick Washer	AN960-516	2
16.	1/2" Thick Washer *	AN960-816	1
17.	Tailwheel *	KSTG0002	1
18.	Cotter Pin *	MS24665-287	2
19.	Socket Head Cap Screw *	KSHW0058	1
20.	Chain	TW-C	2
21.	Grease Fitting *	MS5003-1	1
22.	1/2" Castle Nut *	AN320-8	2
23.	Aluminum Shim, 3/4" x .050 x 2 1/2" **	KAAC0038-9	0
24.	Washer *	KSHW0059	1
25.	Aluminum Bushing, 1/4" x .028 x 5/16" **	KAAC0038-5	0
26.	Tailwheel Assembly	KATG0002	1
27.	1/4" Shear Nut	AN364-428A	2
28.	3/8" Tensile Loc Nut *	AN365-624A	1
29.	3/8" Thick Washer *	AN960-616	1
30.	Pillow Block Strap	PBS	1
31.	Tailwheel - Tension Key *	KPTG0006	1
32.	Tailwheel - Tension Spring *	KSTG0003	1
33.	Hummertang	T12-HT6	2
34.	1/4" Plain Bolt (-28x3/4)	KSHW0016	2
35.	1/4" Plain Nut	AN345-416	2
36.	Loctite Blue ***	LOC-TITE	0
36.	Gear Strap	KPTG0036	1

*Supplied with KATG0002.
**Builder must fabricate from Raw Stock.
***Referenced

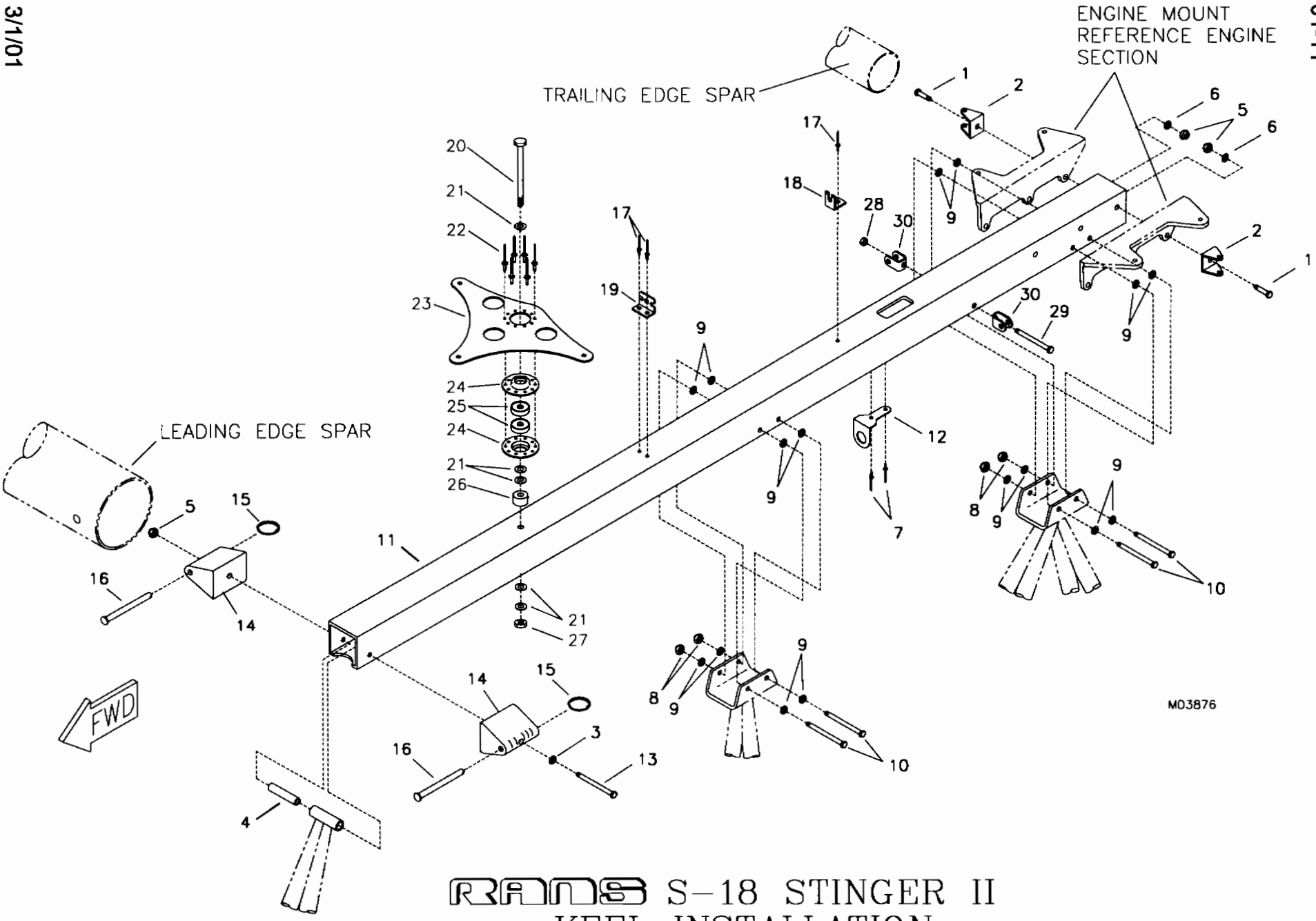

RANS S-18 STINGER II
KEEL INSTALLATION

S-18 Stinger - Keel Installation

#	DESCRIPTION	PART NUMBER	QUANTITY
1.	5/16" Bolt (912)	AN5-12A	2
1.	5/16" Bolt (503/582)	AN5-10A	2
2.	Stainless Steel U Bracket	SU-118	2
3.	5/16" Thick Washer	AN960-516	1
4.	Aluminum Bushing, 3/8" x .058 x 1 3/4" *	KAAC0020	0
5.	5/16" Tensile Nut	AN365-524A	3
6.	5/16" Thin Washer	AN960-516L	2
7.	1/8" Stainless Steel Pop Rivet - Cherry Q **	CCPQ-44	2
8.	1/4" Shear Nut	AN364-428A	4
9.	1/4" Thin Washer	AN960-416L	16
10.	1/4" Bolt	AN4-26A	4
11.	S-18 Keel	KPFU0313	1
12.	Primer Mount Bracket, 503/582 **	KPFS0027	1
13.	5/16" Bolt	AN5-26A	1
14.	Bracket	W-BRKT	2
15.	Loc Ring	RL 27 1/4	2
16.	3/8" Clevis Pin	MS20392-5C97	2
17.	3/16" Stainless Steel Pop Rivet - Cherry Q	CCPQ-64	3
18.	Teleflex Retainer	W-TEL-R	1
19.	Flap Dual Teleflex Retainer (FWD S-12 Style)	FL-DTR-FWD	1
20.	1/4" Bolt	AN4-37A	1
21.	1/4" Thick Washer	AN960-416	5
22.	1/8" Aluminum Pop Rivet - Cherry Q	AAPQ-44	6
23.	Control Stick Tee	CS-TEE14	1
24.	Bearing Flange	BR-FLNG	2
25.	Bearing	SR4APP	2
26.	Stand Off, 3/4" x 3/4"	SO-3/4X3/4	1
27.	1/4" Shear Acorn Nut	52NKTE-048	1
28.	3/16" Shear Nut	AN364-1032A	1
29.	3/16" Bolt	AN3-24A	1
30.	Shackle	RL-205-T	2

*Builder must fabricate from Raw Stock.
**503/582 Engine Only

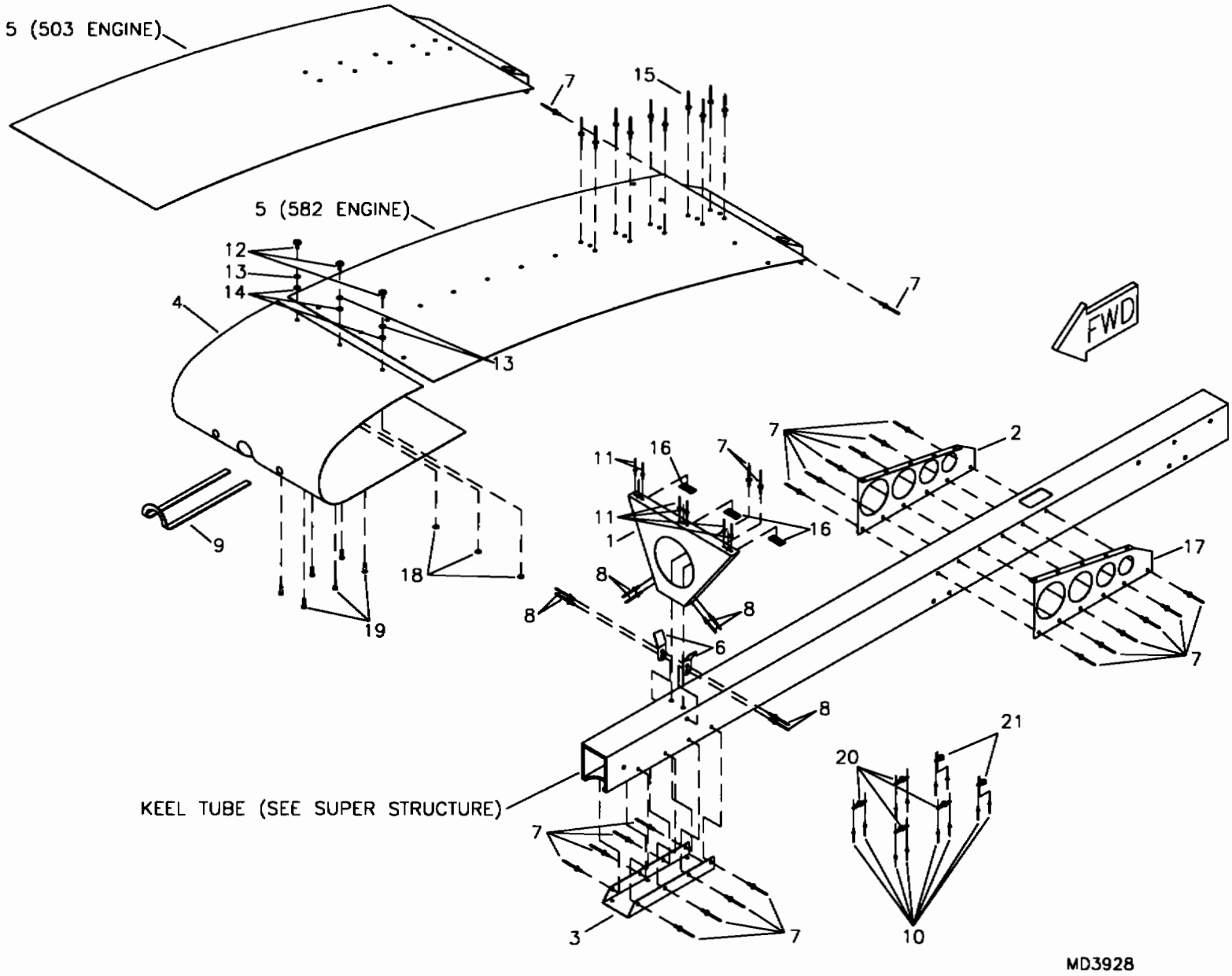

RANS S-18 STINGER II
CENTER COVER ASSEMBLY WITH MINI-POD
STANDARD DACRON COVERING

S-18 Stinger - Center Cover Assembly - with Mini-Pod - Standard Dacron Cover

#	DESCRIPTION	PART NUMBER	QUANTITY
1.	Center Cover - FWD Mount	KPFU0038	1
2.	Center Cover AFT Mount, RH	KPFU0039-R	1
3.	Center Cover Bottom Mount - 503/582/912	KPFU0331	1
4.	Center Cover Forward Wrap	KPFU0320	1
5.	Center Cover - AFT Wrap, 503	KPFU0042	1
5.	Center Cover - AFT Wrap, 582/912	KPFU0325	1
6.	Reinforcement Tang	KPAC0041	2
7.	1/8" Aluminum Pop Rivet - Cherry Q	AAPQ-44	26
8.	1/8" Stainless Steel Pop Rivet - Cherry Q	CCPQ-42	8
9.	Small Rubber Edging	8510K11	24 in
10.	3/32" Aluminum Pop Rivet	40APR1/8	12
11.	3/32" Aluminum Pop Rivet	40APR1/4	6
12.	1/4 Turn Stud	#200	3
13.	Rubber Washer	#201	3
14.	Wear Washer Nylon	#103	3
15.	1/8" Aluminum Pop Rivet - Avex	1691-0410	12
16.	1/4 Turn Receptacle	#302	3
17.	Center Cover AFT Mount, LH	KPFU0039-L	1
18.	Snap Ring	#101	3
19.	8-32 Machine Bolt	AN526-832R6	6
20.	8-32 Nut Plate	MS21047-08	4
21.	Single Ear Nut Plate	MS21051-08	2

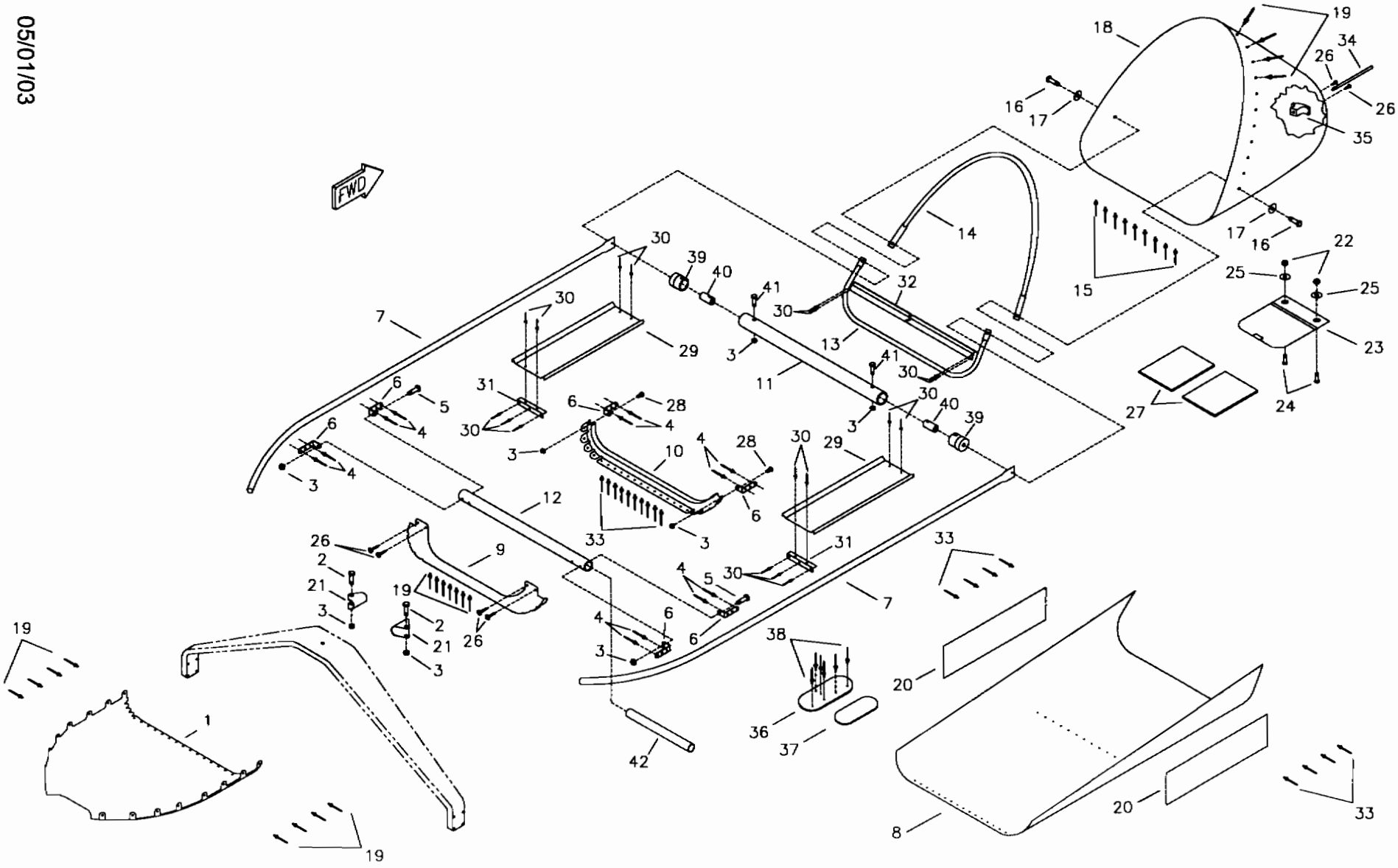

RAMS S-18 STINGER II NOSE POD ASSEMBLY

MD3885

S-18 Stinger - Nose Pod Assembly

#	DESCRIPTION	PART NUMBER	QUANTITY
1.	AFT Belly Pan	KPFU0308	1
2.	3/16" Bolt	AN3-11A	2
3.	3/16" Shear Nut	AN364-1032A	8
4.	3/16" Aluminum Pop Rivet - Cherry Q	AAPQ-62	12
5.	3/16" Bolt	AN3-12A	2
6.	Trim Tab Hinge	ST-16-BENT	6
7.	Belly Pan Side Formers	KPFU0323	2
8.	FWD Belly Pan	KPFU0310	1
9.	AFT Belly Pan Former	KPFU0306	1
10.	Mid Belly Pan Former	KPFU0307	1
11.	FWD Rudder Pedal Pivot Tube *	KPRD0058	0
12.	AFT Rudder Pedal Pivot Tube *	KPRD0059	0
13.	Nose Pod - Bottom Support Tube	KPFU0324	1
14.	Nose Pod Arch Tube - Top Former	KPFU0332	1
15.	1/8" Aluminum Pop Rivet - Cherry Q	AAPQ-44	23
16.	1/4" Bolt	AN4-13A	2
17.	1/4" Large Washer	AN970-4	2
18.	Nose Pod	KPFU0340	1
19.	1/8" Aluminum Pop Rivet - Cherry Q	AAPQ-42	56
20.	Rans S-18 Decal ***	KPPL0004	0
21.	Attach Bracket	KPFU0309	2
22.	8 x 32 Nut	AN364-832A	2
23.	Document Pouch	KPIN0045	1
24.	8-32 Truss Head Bolt	AN515-8R7	2
25.	3/16" Plastic Washer	PW-3	2
26.	#8 Pan Head Screw	8X1/2 PHS	6
27.	Log Books ***	-----	0
28.	3/16" Bolt	AN3-3A	2
29.	S-18 Floorboard	KPFU0317	2
30.	1/8" Stainless Steel Pop Rivet - Cherry Q	CCPQ-42	18
31.	AFT Floorboard Support	KPFU0318	2
32.	Floorboard Attach Angle	KPFU0380	1
33.	1/8" Aluminum Pop Rivet - Cherry Q	AAPQ-41	62
34.	Pitot Tube ****	W-ASI-P	0
35.	Pitot Static Mount, 1" x 1" x 2 1/2" PVC **	KAAC0038-8	0
36.	S-18 Footstep	KPFU0319	1
37.	Anti-Slip Tape 2" Abrasive *	KSAC0045	7 in
38.	1/8" Stainless Steel Pop Rivet - Cherry Q	CCPQ-44	6
39.	1" Compression Tube Fitting	TC-4	2
40.	Insert Nut	I-NUT	2
41.	3/16" Bolt	AN3-12A	2
42.	Foot Step Doubler	KPFU0346	1

*Referenced from Rudder Pedal and Rudder Cable Assembly.
**Builder must fabricate from Raw Stock.
***Refer to General Info Page ****Reference Electrical System

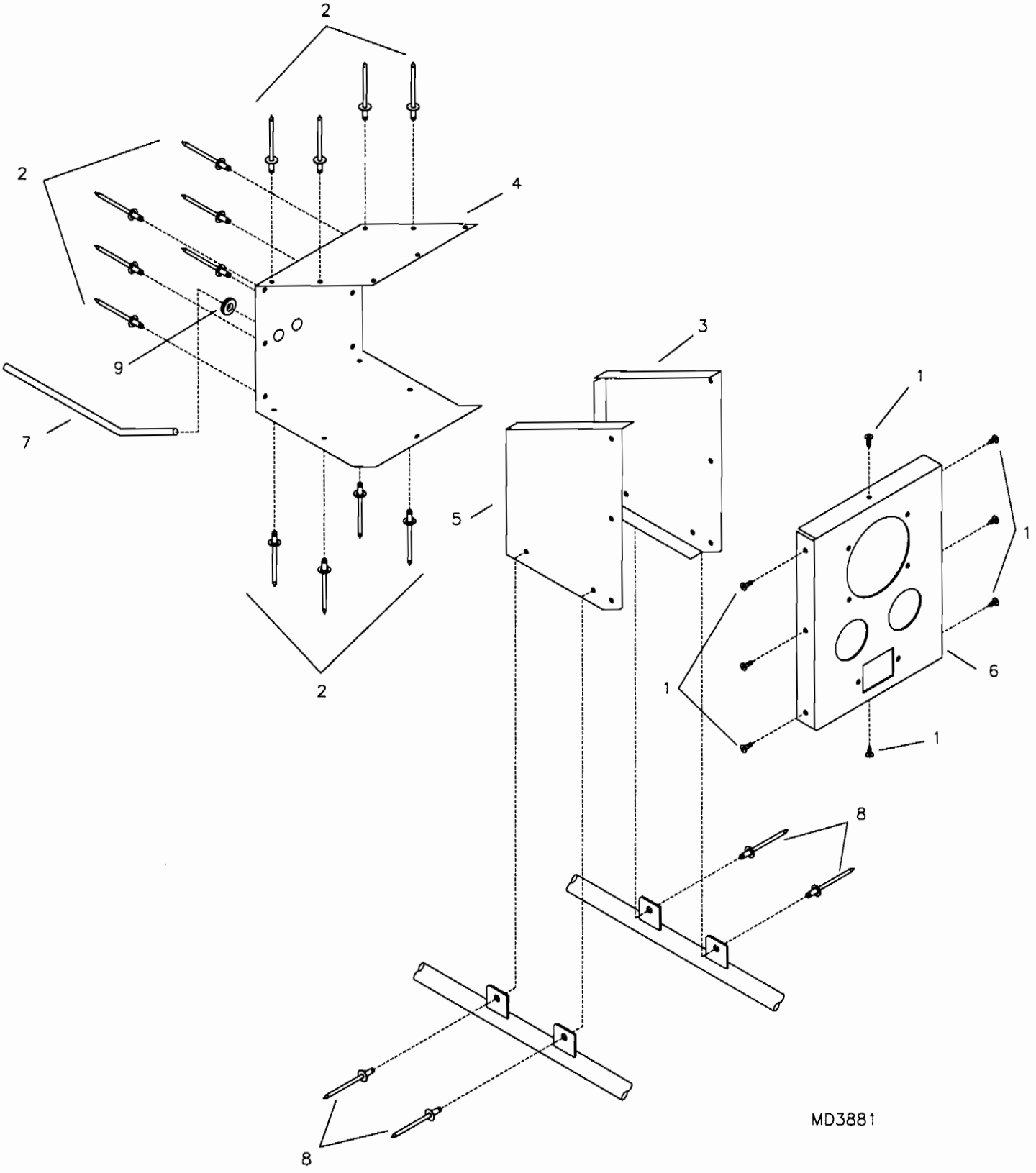

RANS S-18 STINGER II
503 INSTRUMENT PANEL ASSEMBLY

S-18 Stinger - 503 Instrument Panel

#	DESCRIPTION	PART NUMBER	QUANTITY
1.	#8 Pan Head Screw, 503	8X1/2 PHS	8
2.	1/8" Aluminum Pop Rivet - Cherry Q, 503	AAPQ-42	14
3.	S-18 Instrument Panel Side Plate - RH, 503	KPIP0039-R	1
4.	S-18 Instrument Panel Cover, 503	KPIP0040	1
5.	S-18 Instrument Panel Side Plate - LH, 503	KPIP0039-L	1
6.	S-18 Instrument Panel - Optional, 503 Blank	KPIP0043	1
6.	S-18 Instrument Panel - Standard, 503 Pre-cut	KPIP0042	1
7.	1/4" Blue Pitot/Static Line, 503 *	FS-FL	2 ft
8.	1/8" Stainless Steel Pop Rivet - Cherry Q, 503	CCPQ-42	4
9.	1/4" Rubber Grommet, 503	MS35489-11	1

*Referenced.

01-18A

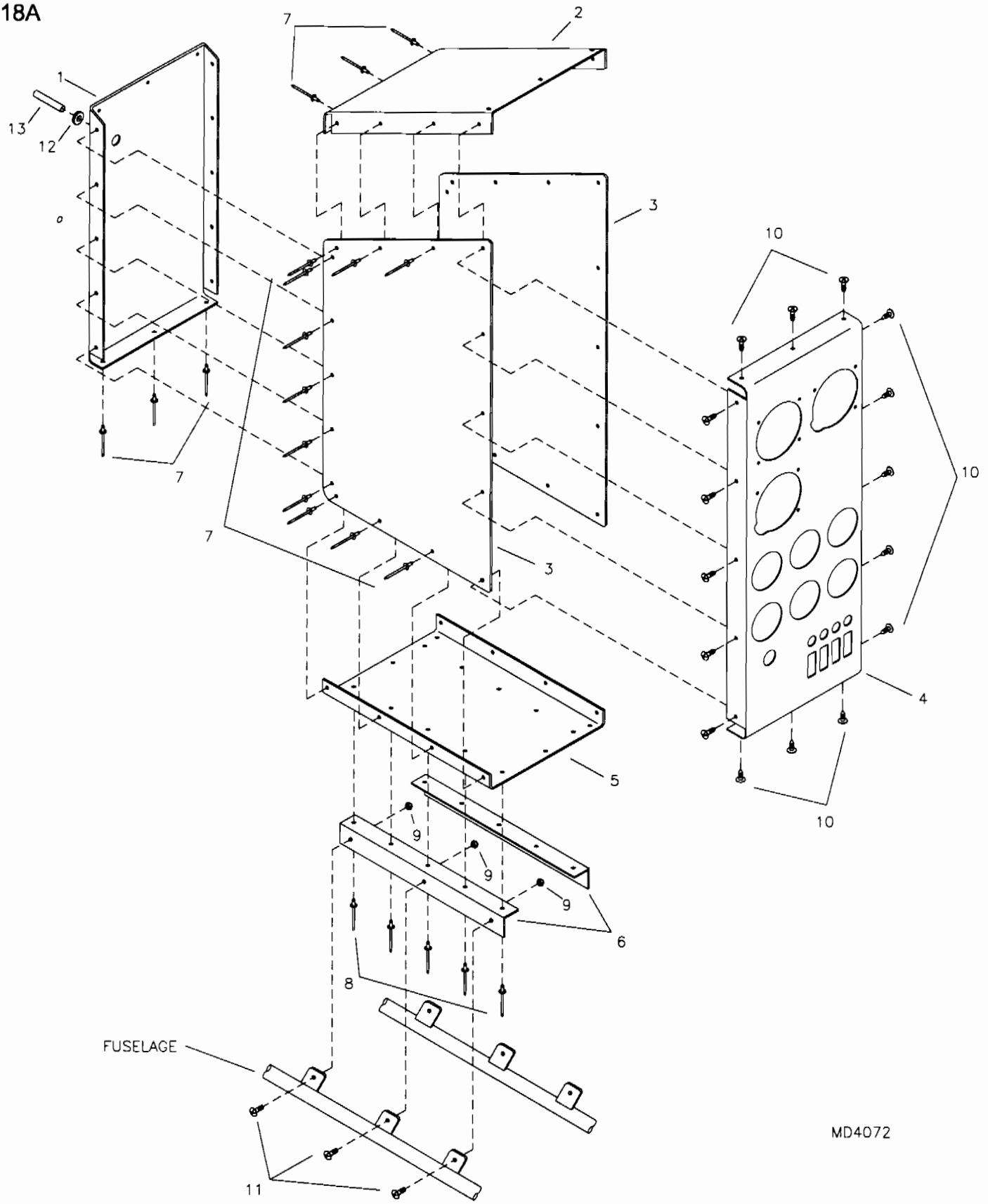

RANS S-18 STINGER II
582/912 INSTRUMENT PANEL ASSEMBLY

05/10/02

S-18 Stinger - 582-912 Instrument Panel

#	DESCRIPTION	PART NUMBER	QUANTITY
1.	S-18 Instrument Panel Forward Cover, 582/912	KPIP0061	1
2.	S-18 Instrument Panel Top Cover, 582/912	KPIP0059	1
3.	S-18 Instrument Panel Side Plate, 582/912	KPIP0058	2
4.	S-18 Instrument Panel - 582 Optional - Blank	KPIP0054	1
4.	S-18 Instrument Panel - Standard Pre-Cut, 582/912	KPIP0055	1
5.	S-18 Instrument Panel Bottom Cover, 582/912	KPIP0060	1
6.	S-18 Instrument Panel Mount Angle, 582/912	KPIP0063	2
7.	1/8" Aluminum Pop Rivet - Cherry Q, 582/912	AAPQ-42	28
8.	1/8" Stainless Steel Pop Rivet - Cherry Q, 582/912	CCPQ-42	10
9.	8 x 32 Nut, 582/912	AN364-832A	6
10.	#6 Small Pan Head Screw, 582/912	6RX1/2 PHS	16
11.	8-32 Truss Head Bolt, 582/912	AN515-8R7	6
12.	Rubber Grommet, 582/912	MS35489-10	1
13.	1/4" Blue Pitot Static Line *	FS-FL	30 in

*Referenced.

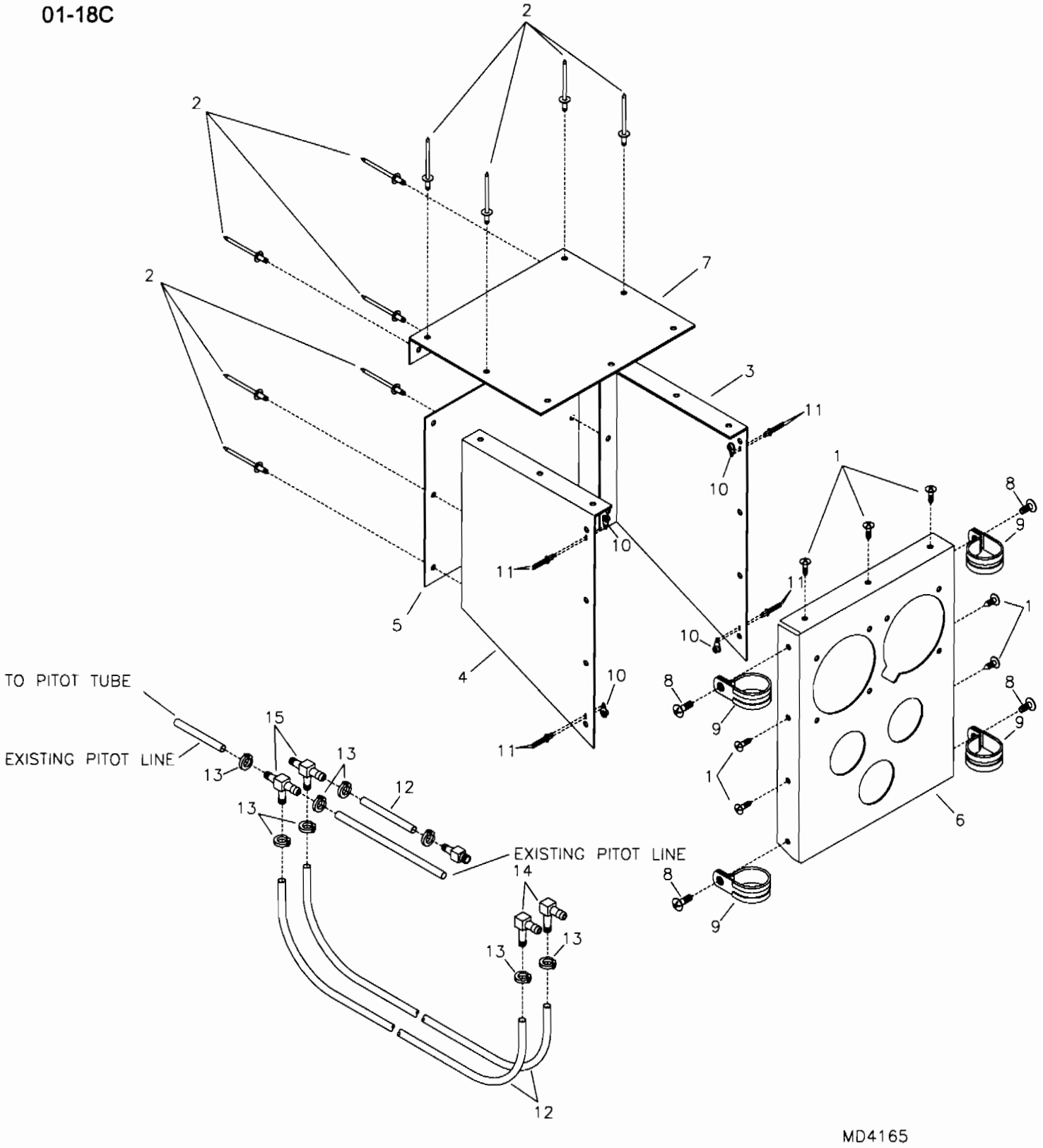

*REFER TO INSTRUMENTS AND ELECTRICAL FOR INSTRUMENT SELECTION.

RANS S-18 STINGER II
OPTONAL AFT INSTRUMENT PANEL

S-18 Stinger - Optional AFT Instrument Panel

#	DESCRIPTION	PART NUMBER	QUANTITY
1.	#6 Small Pan Head Screw	6Rx1/2 PHS	7
2.	1/8" Aluminum Rivet - Cherry Q	AAPQ-42	11
3.	S-18 Optional AFT Panel - Side Plate - RH	KPIP0051-R	1
4.	S-18 Optional AFT Panel - Side Plate - LH	KPIP0051-L	1
5.	S-18 Optional AFT Panel - Fwd Cover	KPIP0053	1
6.	S-18 Optional AFT Panel - AFT Panel-Standard Pre-cut	KPIP0050	1
6.	S-18 Optional AFT Panel - Optional Blank	KPIP0070	1
7.	S-18 Optional AFT Panel - Top Cover	KPIP0052	1
8.	Pan Head Phillips Bolt	KSHW0006	4
9.	5/8" Cushioned Tube Clamp	MS21919-DG10	4
10.	3/16" Single Ear Nut Plate	MS21051-L3	4
11.	3/32" Aluminum Pop Rivet	40APR1/8	8
12.	1/4" Blue Pitot/Static Line ** (Optional)	FS-FL	12 ft
13.	Line Clamp 3/8" ** (Optional)	FS-LCL 3/8	8
14.	90 Withdrawal Fitting ** (Optional)	8342	2
15.	Line Tee ** (Optional)	8338	2
16.	Straight Withdrawal Fitting ** (Optional)	8330	1

*Refer to Instruments and Electrical for Instrument Selection
**Optional Pitot Static Kit

01-18E

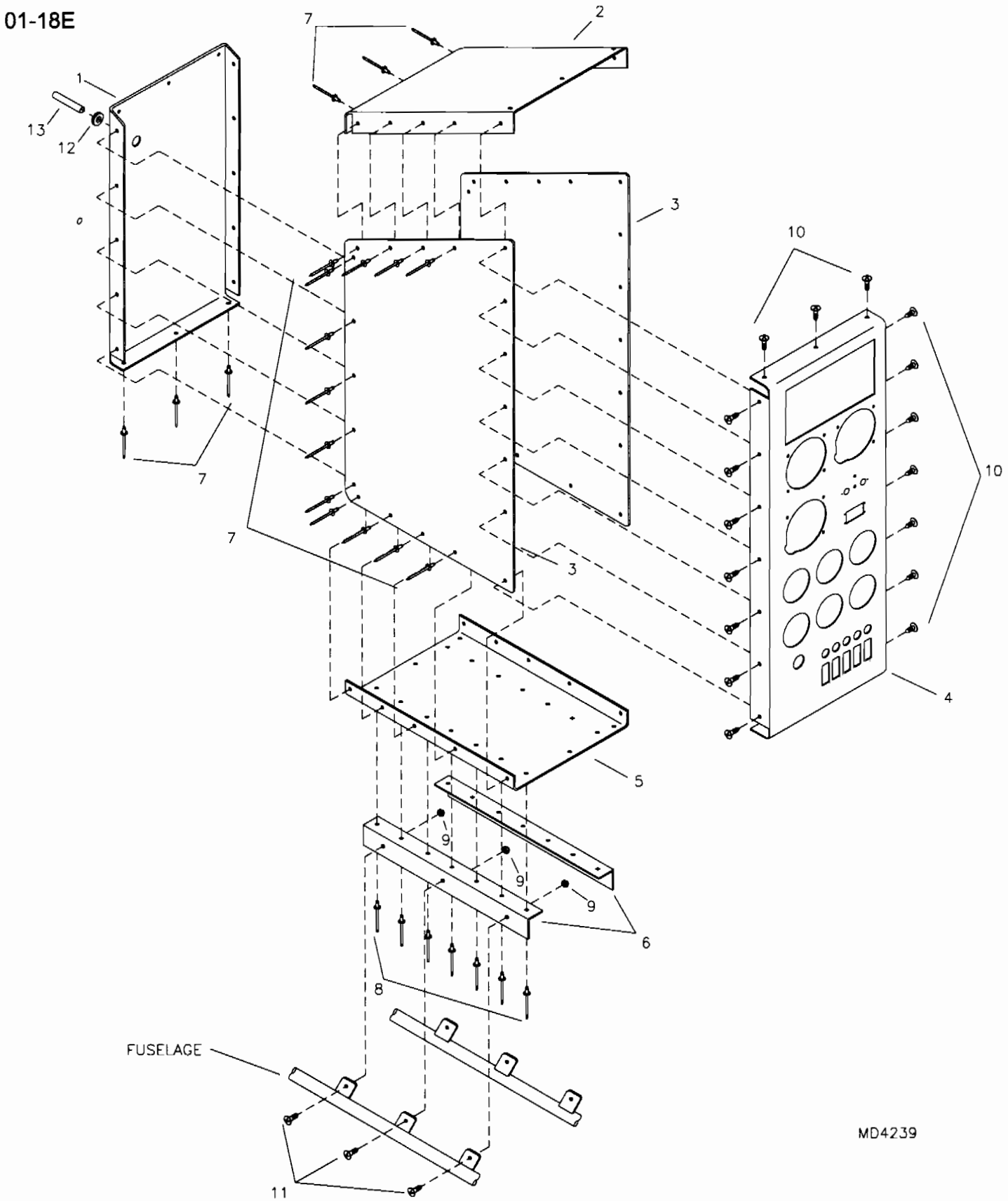

RANS S-18 STINGER II
OPTIONAL AVIONICS INSTRUMENT PANEL ASSEMBLY

05/10/02

S-18 Stinger - Optional Avionics Panel

NOTE: Avionics panel may be used with all engines.

#	DESCRIPTION	PART NUMBER	QUANTITY
1.	S-18 Instrument Panel Forward Cover, Avionics	KPIP0047	1
2.	S-18 Instrument Panel Top Cover, Avionics	KPIP0046	1
3.	S-18 Instrument Panel Side Plate, Avionics	KPIP0045	2
4.	S-18 Instrument Panel - Standard Pre-Cut, Avionics	KPIP0044	1
4.	S-18 Instrument Panel - Optional Blank, Avionics	KPIP0056	1
5.	S-18 Instrument Panel Bottom Cover, Avionics	KPIP0048	1
6.	S-18 Instrument Panel Mount Angle, Avionics	KPIP0068	2
7.	1/8" Aluminum Pop Rivet - Cherry Q, Avionics	AAPQ-42	32
8.	1/8" Stainless Steel Pop Rivet - Cherry Q, Avionic	CCPQ-42	14
9.	8 x 32 Nut, Avionics	AN364-832A	6
10.	#6 Small Pan Head Screw, Avionics	6RX1/2 PHS	17
11.	8-32 Truss Head Bolt, Avionics	AN515-8R7	6
12.	Rubber Grommet, Avionics	MS35489-10	1
13.	1/4" Blue Pitot Static Line Avionics *	FS-FL	30 in

*Referenced

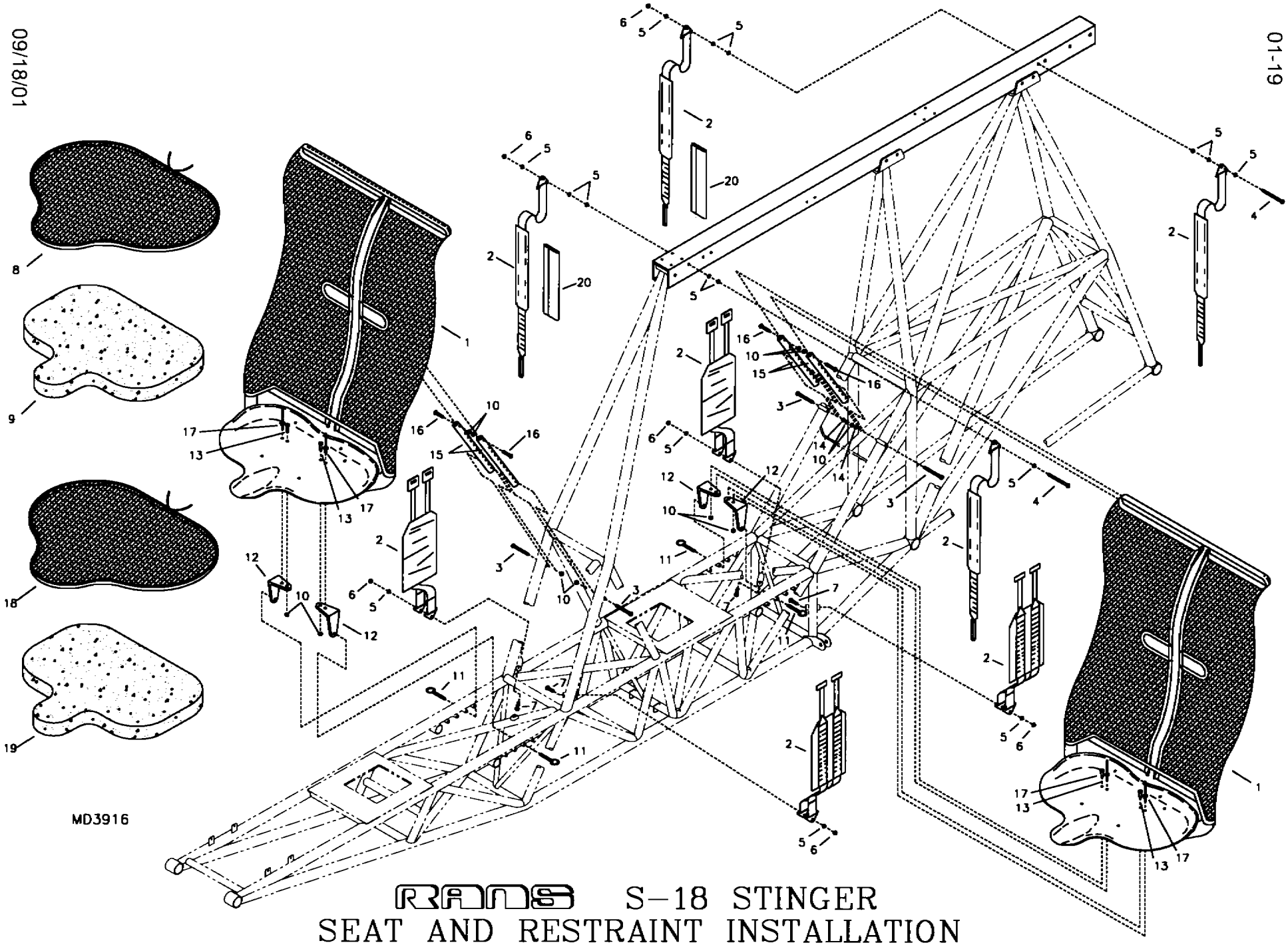

RANS S-18 STINGER
SEAT AND RESTRAINT INSTALLATION

S-18 Stinger - Seat & Restraint Installation

#	DESCRIPTION	PART NUMBER	QUANTITY
1.	S-18 Seat Assembly	KAST0023	2
2.	S-18 Hooker Harness	KSST0014	2
3.	3/16" Bolt	AN3-20A	4
4.	1/4" Bolt	AN4-27A	2
5.	1/4" Thick Washer	AN960-416	16
6.	1/4" Shear Nut	AN364-428A	6
7.	1/4" Bolt	AN4-20A	4
8.	Seat Bottom Cover - FWD	BPST0022	1
9.	Seat Bottom Foam - FWD	BPST0021	1
10.	3/16" Shear Nut	AN364-1032A	12
11.	1/4" Quick Pin	PIN 1/4X1.2	4
12.	Seat Attach Angle	KPST0051	4
13.	3/16" Bolt	AN3-6A	4
14.	3/16" Thin Washer	AN960-10L	10
15.	Sprint Brace Flute Tube	BPST0001	4
16.	3/16" Bolt	AN3-12A	4
17.	3/16" Steel Rivet	SSPQ-68	4
18.	Seat Bottom Cover - AFT	KPST0055	1
19.	Seat Bottom Foam - AFT	KPST0056	1
20.	S-18 Seat Belt Keepers - Velcro Closure	KPST0057	2

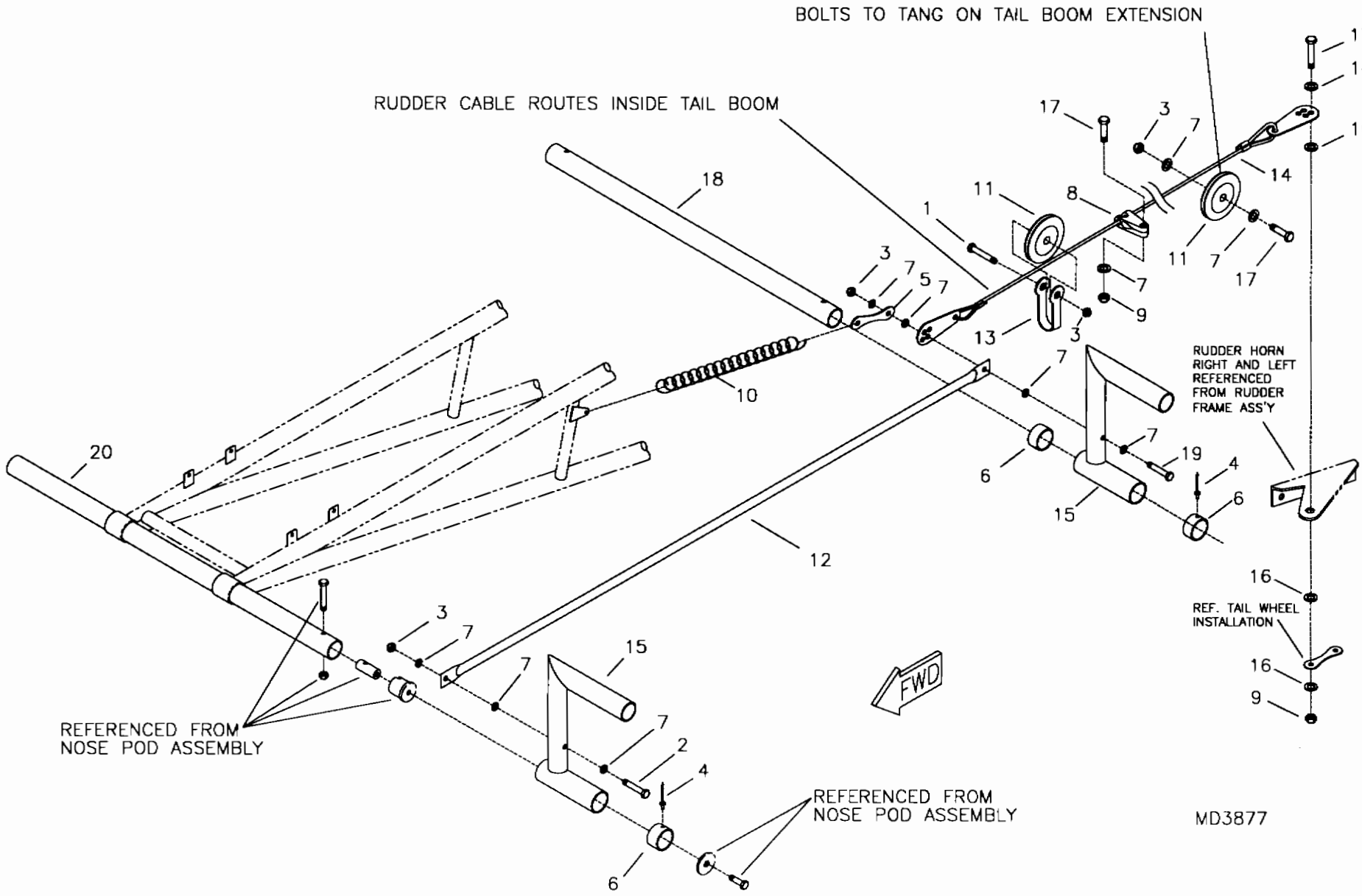

RANS S-18 STINGER II
RUDDER PEDAL AND CABLE ASSEMBLY

S-18 Stinger - Rudder Pedal and Rudder Cable Assembly

#	DESCRIPTION	PART NUMBER	QUANTITY
1.	3/16" Bolt	AN3-6A	2
2.	3/16" Bolt	AN3-12A	2
3.	3/16" Shear Nut	AN364-1032A	8
4.	1/8" Stainless Steel Pop Rivet - Cherry Q	CCPQ-42	4
5.	Rudder Return Tang **	KPAC0038	2
6.	Aluminum Bushing, 1 1/8" x .058 x 1/2" *	KAAC0038-4	0
7.	3/16" Thin Washer	AN960-10L	20
8.	Cable Guide	HA-144	2
9.	3/16" Tensile Nut	AN365-1032A	4
10.	Rudder Return Spring	KPCS0178	2
11.	Small Pulley	AN210-1A	4
12.	Rudder Pedal Link Rod	KPRD0057	2
13.	Pulley Attach Bracket	KPCS0152	2
14.	Rudder Cable	KACS0029	2
15.	Rudder Pedal	KPRD0056	4
16.	3/16" Large Washer	AN970-3	8
17.	3/16" Bolt	AN3-7A	6
18.	AFT Rudder Pedal Pivot Tube	KPRD0059	1
19.	3/16" Bolt	AN3-14A	2
20.	FWD Rudder Pedal Pivot Tube	KPRD0058	1

*Builder must fabricate from Raw Stock.
**Builder must modify.

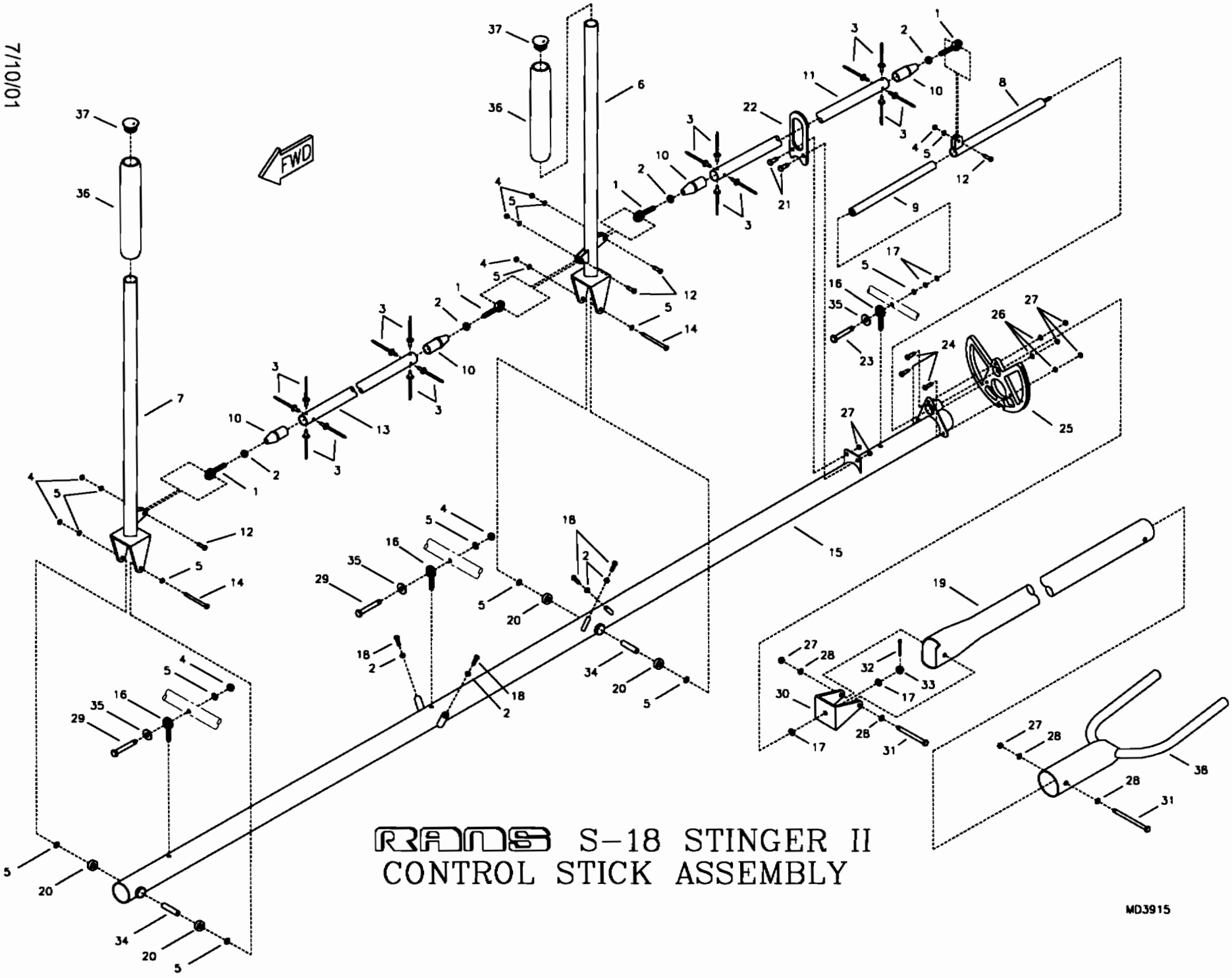

RANS S-18 STINGER II
CONTROL STICK ASSEMBLY

S-18 Stinger - Control Stick System Assembly

#	DESCRIPTION	PART NUMBER	QUANTITY
1.	Male Rod End, 1/4" X 1/4"	NM-4	4
2.	1/4" Plain Nut	AN345-416	8
3.	1/8" Stainless Steel Pop Rivet - Cherry Q	CCPQ-42	16
4.	1/4" Shear Nut	AN364-428A	8
5.	1/4" Thin Washer	AN960-416L	15
6.	Aft Control Stick	KPCS0183	1
7.	FWD Control Stick	KPCS0182	1
8.	Elevator Slider Tube	KPCS0199	1
9.	Inner Slide Tube	KPCS0181	1
10.	Push Pull Tube End Fitting	KPCS0016	4
11.	AFT Control Stick Connect Tube	KPCS0185	1
12.	1/4" Bolt	AN4-7A	5
13.	FWD Control Stick Connect Tube	KPCS0186	1
14.	1/4" Bolt	AN4-23A	2
15.	Control Stick Torque Tube	KPCS0179	1
16.	Rod End	KSHW0070	3
17.	1/4" Thick Washer	AN960-416	3
18.	1/4" Plain Bolt	1/4X1 BOLT	4
19.	Elevator Push Pull Tube	KPCS0200	1
20.	Bearing	SR4APP	4
21.	3/16" Bolt	AN3-4A	2
22.	Push Pull Tube Guide	KPCS0193	1
23.	1/4" Bolt - Drilled Head	AN4H-14A	1
24.	3/16" Bolt	AN3-5A	3
25.	Aileron Pulley	KPCS0184	1
26.	3/16" Thin Washer	AN960-10L	3
27.	3/16" Shear Nut	AN364-1032A	7
28.	3/16" Thick Washer	AN960-10	4
29.	1/4" Bolt	AN4-14A	2
30.	U Bracket	KPAC0036	1
31.	3/16" Bolt	AN3-15A	2
32.	Small Cotter Pin	MS24665-134	1
33.	1/4" Castle Nut	AN310-4	1
34.	Aluminum Bushing, 3/8" x .058 x 1 1/8" *	KAAC0038-2	0
35.	3/16" Large Washer **	AN970-3	3
36.	Control Stick Grip	CS-G	2
37.	Control Stick End Cap	CS-EC	2
38.	Elevator Yoke	KPEL0015	1

*Builder must fabricate from Raw Stock.
**Drill out inside diameter to 1/4".

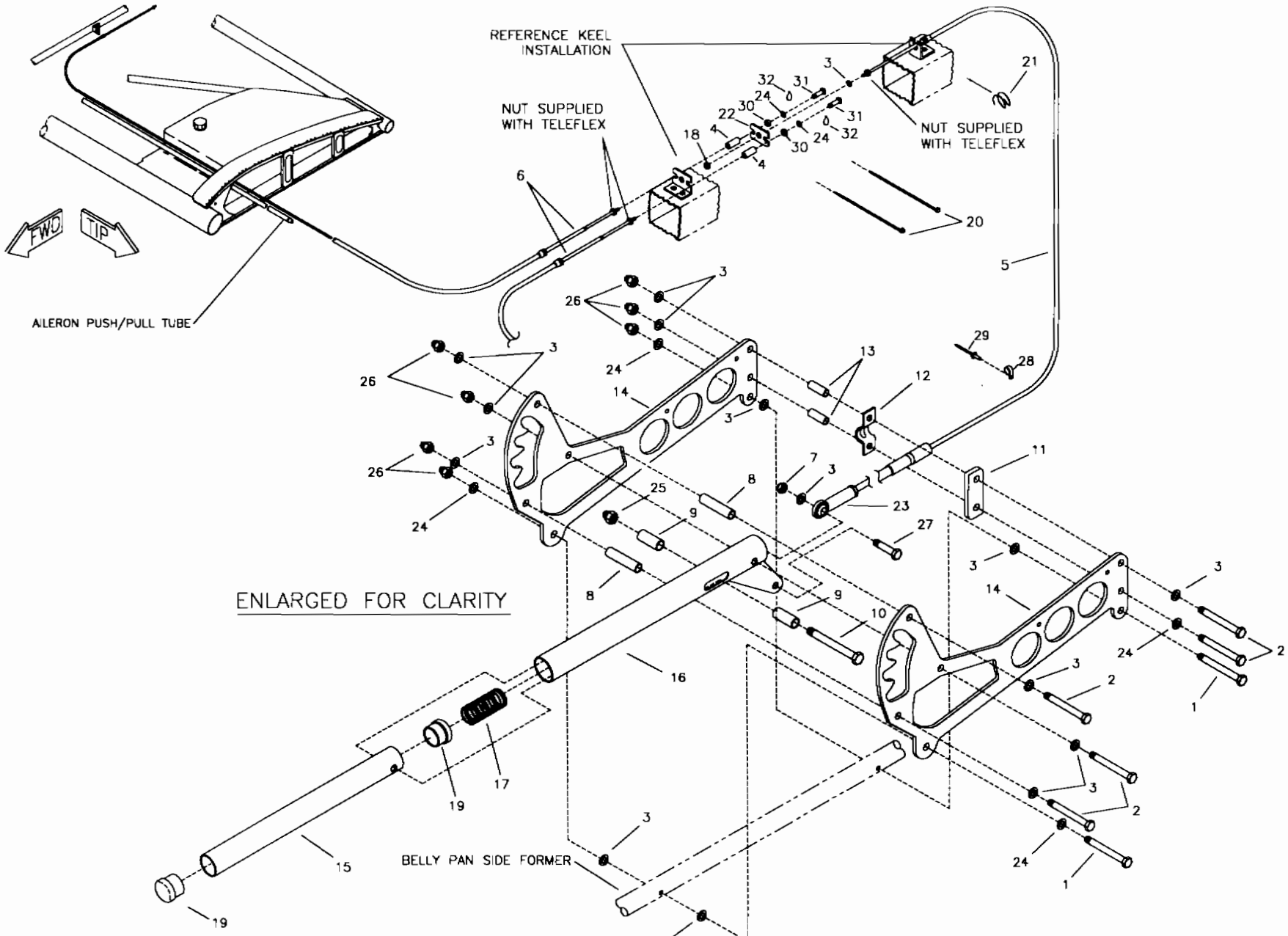

RANS S-18 STINGER II
FLAP LEVER ASSEMBLY

MD3931

S-18 Stinger - Flap Lever Assembly

#	DESCRIPTION	PART NUMBER	QUANTITY
1.	3/16" Bolt	AN3-13A	2
2.	3/16" Bolt	AN3-14A	5
3.	3/16" Thick Washer	AN960-10	14
4.	Insert Nut	KPAC0012	2
5.	Flap Teleflex, 11'	W-F-TELFX-11	1
6.	Flap Teleflex, 8'	W-F-TELFX-8	2
7.	3/16" Shear Nut	AN364-1032A	1
8.	Aluminum Bushing, 1/4" x .028 x 7/8" *	KAAC0038-5	0
9.	Aluminum Bushing, 3/8" x .058 x 3/8" *	KAAC0038-2	0
10.	1/4" Bolt	AN4-20A	1
11.	Plastic Shim	KPAC0121	1
12.	Teleflex Retainer Bracket	KSCS0001	1
13.	Aluminum Bushing, 1/4" x .028 x 11/16" *	KAAC0038-5	0
14.	Flap Lever Side Plate	KPFL0076	2
15.	Flap Trip Release Tube	KPFL0045	1
16.	Flap Lever	KPFL0044	1
17.	Spring	C-21	1
18.	3/16" Tensile Nut	AN365-1032A	1
19.	3/4" Endcap	3/4 ENDCAP	2
20.	Zip Ties	ZIP TIES	2
21.	Safety Wire	SAFETY WIRE	0
22.	Flap Dual Teleflex Retainer, AFT	FL-DTR-AFT	1
23.	Female Rod End	NF-3	1
24.	3/16" Thin Washer	AN960-10L	5
25.	1/4" Shear Acorn Nut	52NKTE-048	1
26.	3/16" Shear Acorn Nut	22NKM02	7
27.	3/16" Bolt	AN3-6A	1
28.	Cushioned Tube Clamp	MS21919WDG6	1
29.	3/16" Aluminum Pop Rivet - Cherry Q	AAPQ-62	1
30.	Aluminum Bushing, 1/4" X .028 X 1/8" *	KAAC0038-5	0
31.	3/16" Bolt	AN3-3A	2
32.	Loctite Blue	LOC-TITE	0

*Builder must fabricate from Raw Stock.

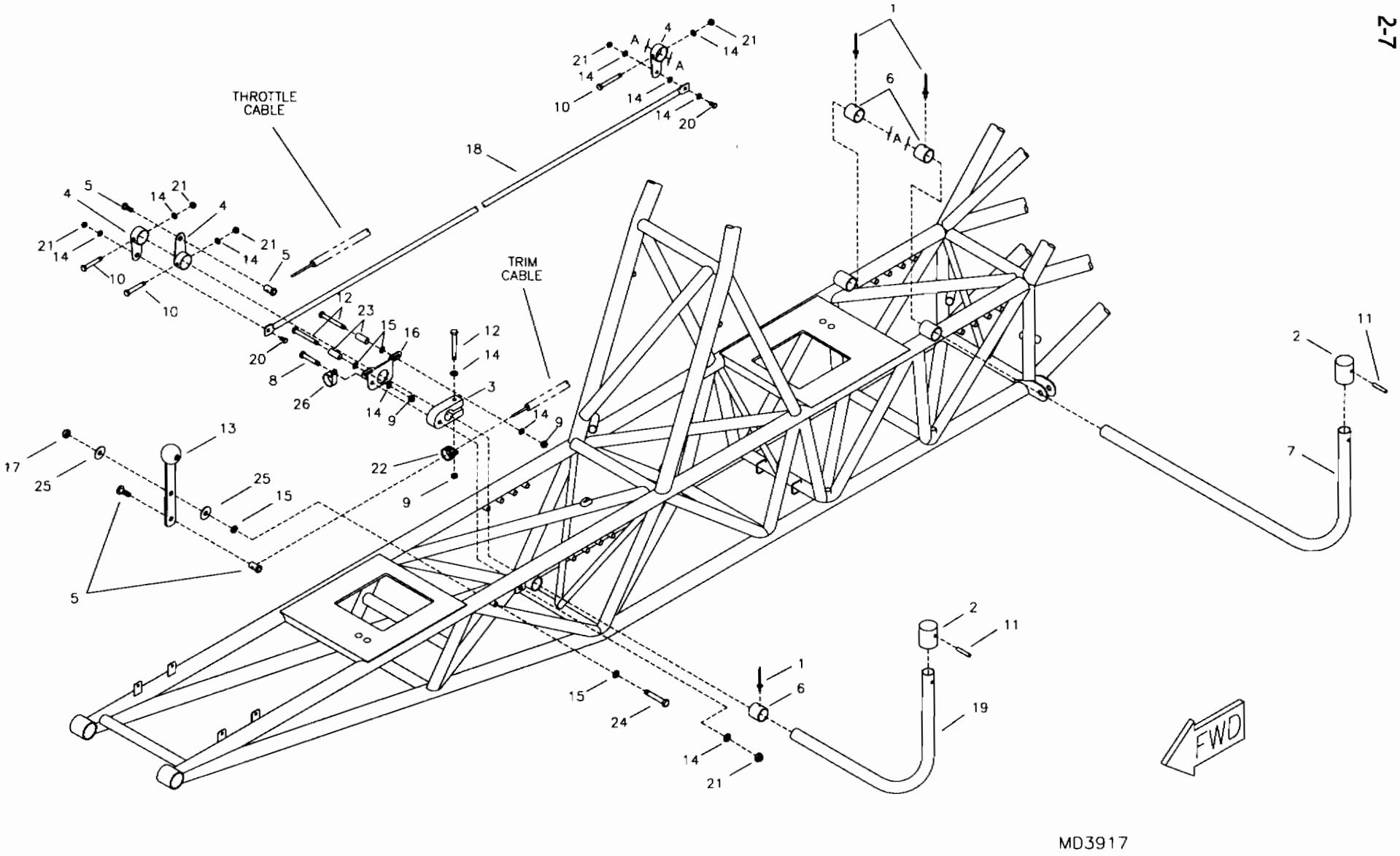

RANS S-18 STINGER II
503/582 THROTTLE AND TRIM LEVER INSTALLATION

S-18 Stinger - 503/582 Throttle and Trim Lever Installation

#	DESCRIPTION	PART NUMBER	QUANTITY
1.	1/8" Aluminum Pop Rivet - Cherry Q	AAPQ-42	3
2.	Throttle Lever Knob	KPCS0194	2
3.	Throttle Lever Friction Block	KPCS0143	1
4.	Throttle Bracket	KPCS0198	3
5.	Wire Swivel/Screw Stop	2361	2
6.	Throttle Lever Stop Ring	KPCS0144	3
7.	AFT Throttle Lever	KPCS0142	1
8.	3/16" Bolt	AN3-10A	1
9.	3/16" Shear Nut	AN364-1032A	3
10.	3/16" Bolt	AN3-11A	3
11.	1/8" Roll Pin, 1"	20032446	2
12.	3/16" Bolt	AN3-12A	3
13.	Trim Lever	KSCS0007	1
14.	3/16" Thin Washer	AN960-10L	8
15.	3/16" Thick Washer	AN960-10	4
16.	Throttle Stop Plate	KPCS0192	1
17.	3/16" Shear Acorn Nut	22NKM02	1
18.	Throttle Connect Rod	KPCS0197	1
19.	FWD Throttle Lever	KPCS0142	1
20.	3/16" Bolt	AN3-4A	2
21.	3/16" Shear Nut	AN364-1032A	6
22.	Cushioned Tube Clamp	MS21919WDG3	1
23.	Aluminum Bushing, 1/4" x .028 x 3/4" **	KAAC0038-5	0
24.	3/16" Bolt	AN3-14A	1
25.	3/16" Large Washer	AN970-3	2
26.	Clamp	KPAC0168	1

*Builder trims to fit. Refer to text for details.
**Builder must fabricate from raw stock.

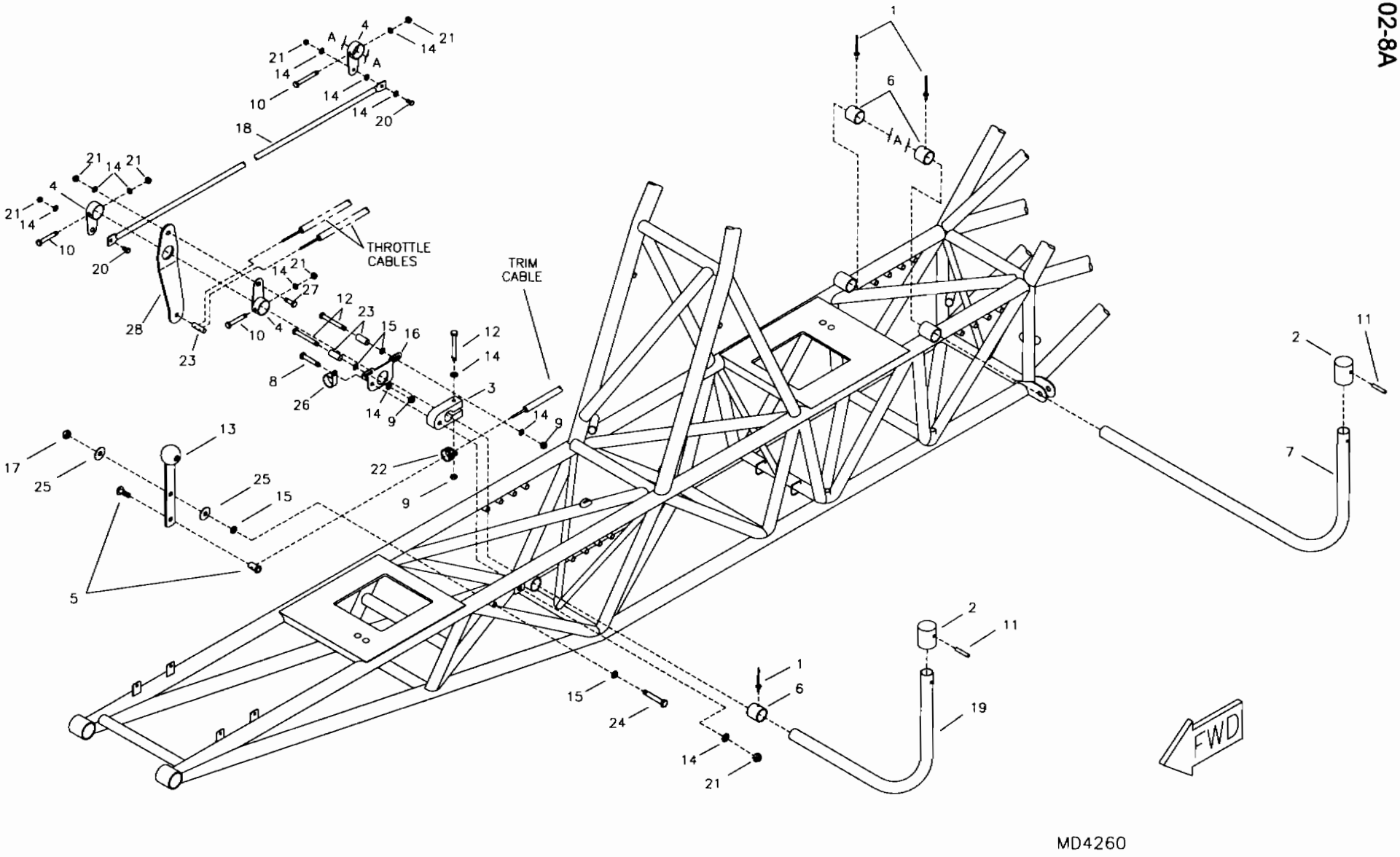

RANS S-18 STINGER II
912 THROTTLE AND TRIM LEVER INSTALLATION

S-18 Stinger - 912 Throttle and Trim Lever Installation

#	DESCRIPTION	PART NUMBER	QUANTITY
1.	1/8" Aluminum Pop Rivet - Cherry Q	AAPQ-42	3
2.	Throttle Lever Knob	KPCS0194	2
3.	Throttle Lever Friction Block	KPCS0143	1
4.	Throttle Bracket	KPCS0198	3
5.	Wire Swivel/Screw Stop	2361	1
6.	Throttle Lever Stop Ring	KPCS0144	3
7.	AFT Throttle Lever	KPCS0142	1
8.	3/16" Bolt	AN3-10A	1
9.	3/16" Shear Nut	AN364-1032A	3
10.	3/16" Bolt	AN3-11A	3
11.	1/8" Roll Pin, 1"	20032446	2
12.	3/16" Bolt	AN3-12A	3
13.	Trim Lever	KSCS0007	1
14.	3/16" Thin Washer	AN960-10L	9
15.	3/16" Thick Washer	AN960-10	4
16.	Throttle Stop Plate	KPCS0192	1
17.	3/16" Shear Acorn Nut	22NKM02	1
18.	Throttle Connect Rod	KPCS0197	1
19.	FWD Throttle Lever	KPCS0142	1
20.	3/16" Bolt	AN3-4A	2
21.	3/16" Shear Nut	AN364-1032A	5
22.	Cushioned Tube Clamp	MS21919-WDG3	1
23.	Aluminum Bushing, 1/4" x .028 x 3/4" **	KAAC0038-5	0
24.	3/16" Bolt	AN3-14A	1
25.	3/16" Large Washer	AN970-3	2
26.	Clamp	KPAC0168	1
27.	3/16" Bolt	AN3-3A	1
28.	Throttle Lever Arm, 912	KPPW0248	1

*Builder trims to fit. Refer to text for details.
**Builder must fabricate from raw stock.

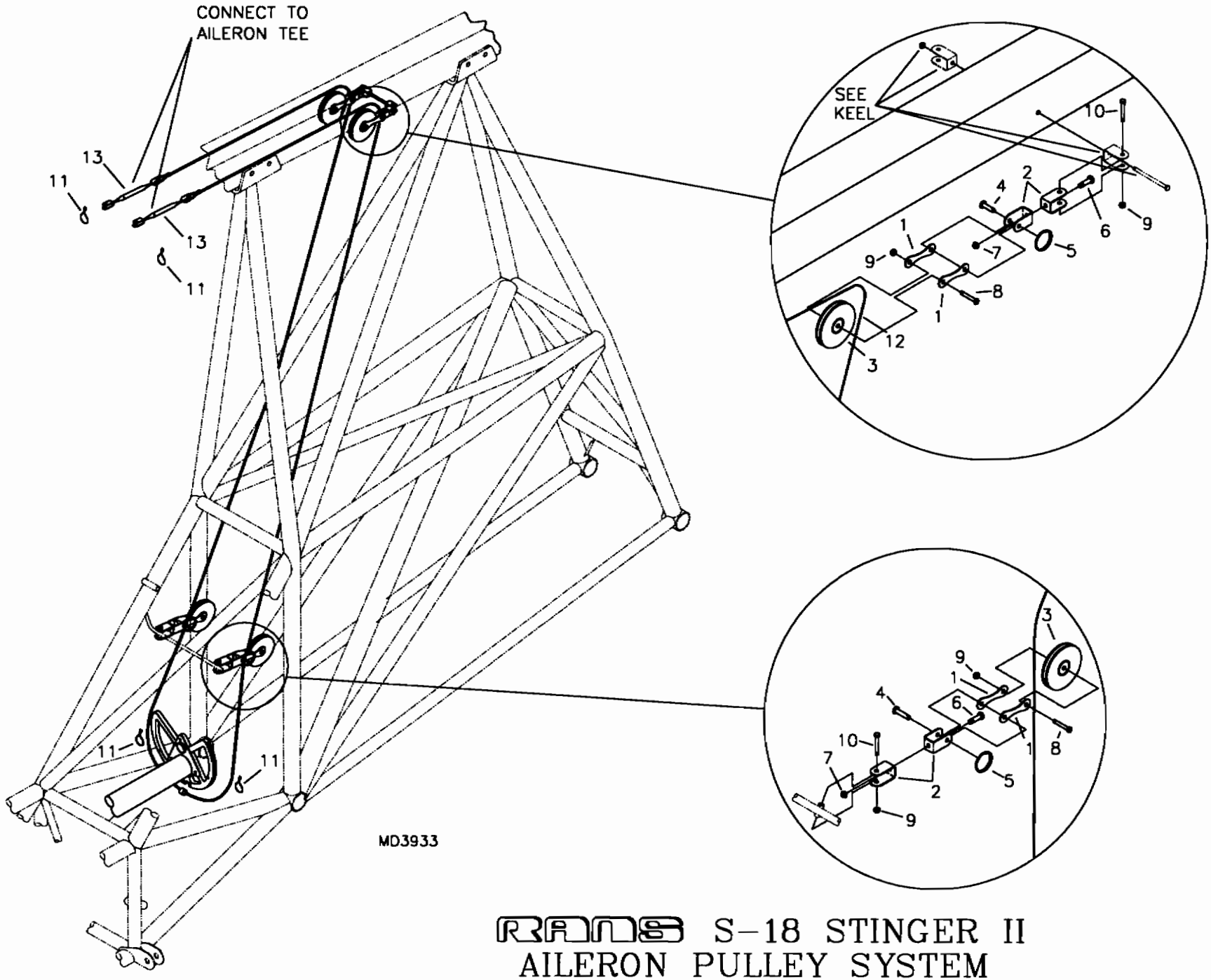

RANS S-18 STINGER II
AILERON PULLEY SYSTEM

S-18 Stinger - Aileron Pulley System

#	DESCRIPTION	PART NUMBER	QUANTITY
1.	Hummertang	T12-HT6	8
2.	Shackle	RL-205-T	8
3.	Pulley	AN210-2A	4
4.	3/16" Clevis Pin	MS20392-2C17	4
5.	Loc Ring	RL 27 1/4	4
6.	3/16" Bolt	AN3-3A	4
7.	3/16" Tensile Nut	AN365-1032A	4
8.	3/16" Bolt	AN3-6A	4
9.	3/16" Shear Nut	AN364-1032A	8
10.	3/16" Bolt	AN3-7A	4
11.	Safety Wire	SAFETY WIRE	0
12.	Aileron Cable	KACS0030	1
13.	Turnbuckle	RL-335-AT	2
14.	Safety Wire	SAFETY WIRE	0

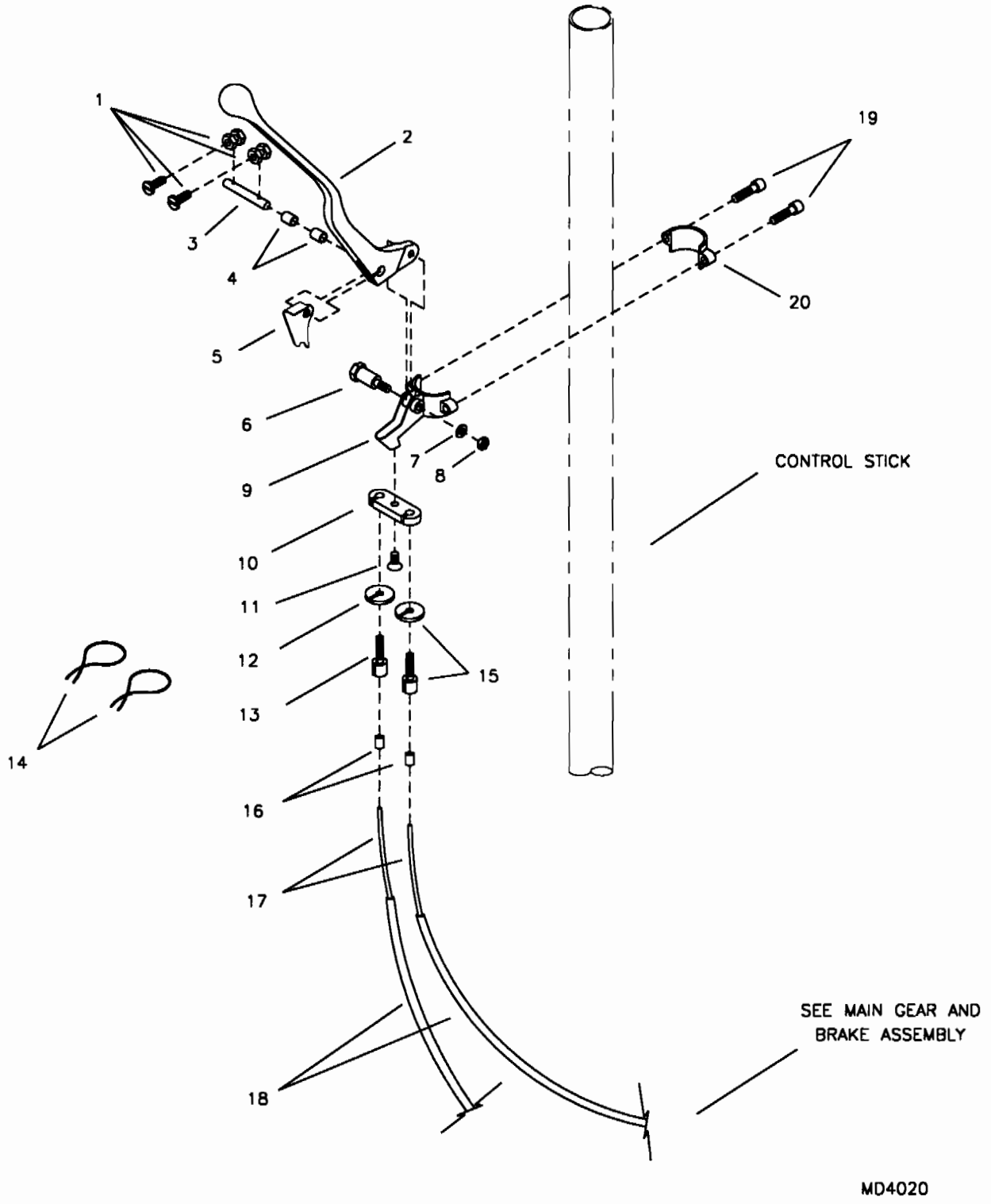

RANS S-18 STINGER II
BRAKE LEVER ASSEMBLY

S-18 Stinger - Brake Lever Assembly & Installation

#	DESCRIPTION	PART NUMBER	QUANTITY
1.	Wire Stop/Screw	2360	2
2.	Brake Lever	KSBS0009	1
3.	Wire Attach Rod	KPBS0011	1
4.	Aluminum Bushing, 3/8" x .058 **	KAAC0038-2	0
5.	Park Brake Tab	KPBS0027	1
6.	Bolt *	KSBS0011-1	1
7.	Loc Washer *	KSBS0011-2	1
8.	Nut *	KSBS0011-3	1
9.	Brake Lever Bracket	KSBS0011	1
10.	Brake Cable Adjustment Plate	KPBS0021	1
11.	Countersunk Socket Head Screw	KSHW0017	1
12.	Ferrule Nut *	KSBS0011-4	1
13.	Ferrule *	KSBS0011-5	1
14.	Safety Wire	SAFETY WIRE	0
15.	Cable Ferrule/Nut	KSBS0012	1
16.	Cable Conduit Ferrule End Cap	80-0002-01	2
17.	Brake Wire ** , ***	TR-PW	0
18.	Cable Housing ***	B-CH	0
19.	Bolt *	KSBS0011-7	2
20.	Bracket Clamp *	KSBS0011-6	1

*Supplied pre-assembled with KSBS0011.
**Builder must fabricate or cut to length from Raw Stock.
**Referenced from Main Gear & Brake Assembly.

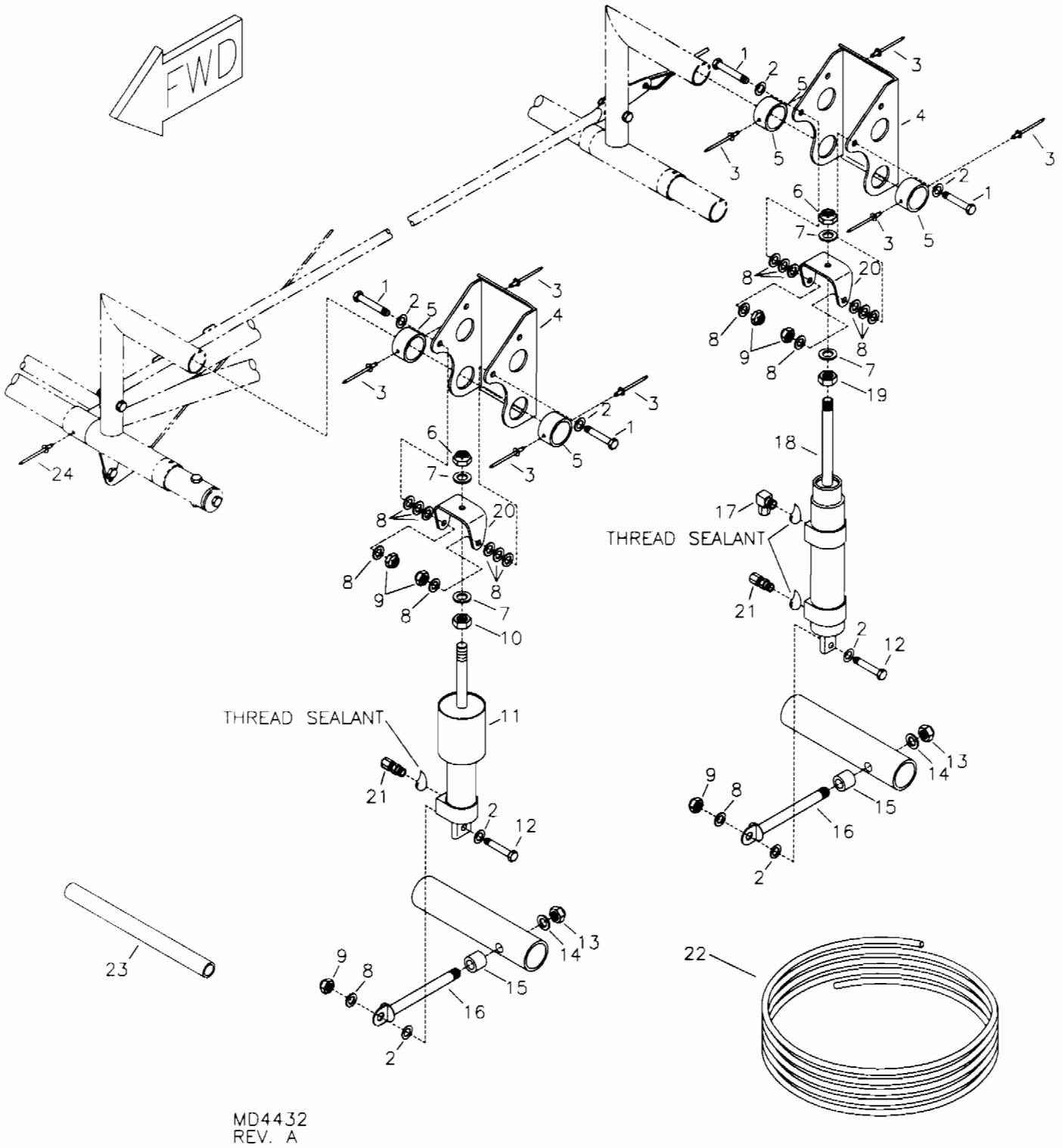

RANS

OPTIONAL HYDRAULIC BRAKE PEDAL INSTALLATION

S-18 Stinger - Optional Hydraulic Brake Pedal Installation

#	DESCRIPTION	PART NUMBER	QUANTITY
1.	3/16" Bolt	AN3-6A	8
2.	3/16" Thin Washer	AN960-10L	16
3.	1/8" Aluminum Rivet	AAPQ-42	40
4.	Hydraulic Brake Pedal	KPBS0032	4
5.	Brake Pedal Stop Ring	KPCS0228	8
6.	5/16" Shear Nut	AN364-524A	4
7.	5/16" Thin Washer	AN960-516L	8
8.	3/16" Thick Washer	AN960-10	36
9.	3/16" Shear Nut	AN364-1032A	12
10.	5/16" Jam Nut *	KSBS0029-1	0
11.	Hydraulic Brake Master Cylinder - w/ Reservoir	KSBS0029	2
12.	3/16" Bolt	AN3-7A	4
13.	1/4" Shear Nut	AN364-428A	4
14.	1/4" Thick Washer	AN960-416	4
15.	3/8" x .065 x 5/8" Aluminum Bushing **	KAAC0043-1	0
16.	1/4" Eye Bolt	AN43B-20A	4
17.	90 Fitting	KSBS0001	2
18.	Hydraulic Brake Master Cylinder	KSBS0015	2
19.	5/16" Jam Nut *	KSBS0015-1	0
20.	U-Bracket	KPAC0017	4
21.	Straight Fitting	KSBS0002	4
22.	Hydraulic Brake Line	KSBS0004	22 ft
23.	S-18 Hydraulic Brake Raw Stock	KAAC0043	1
24.	1/8" Stainless Steel Pop Rivet - Cherry Q (-6 503)	CCPQ-42	2

*Supplied with master brake cylinder.
**Builder fabricates from raw stock.

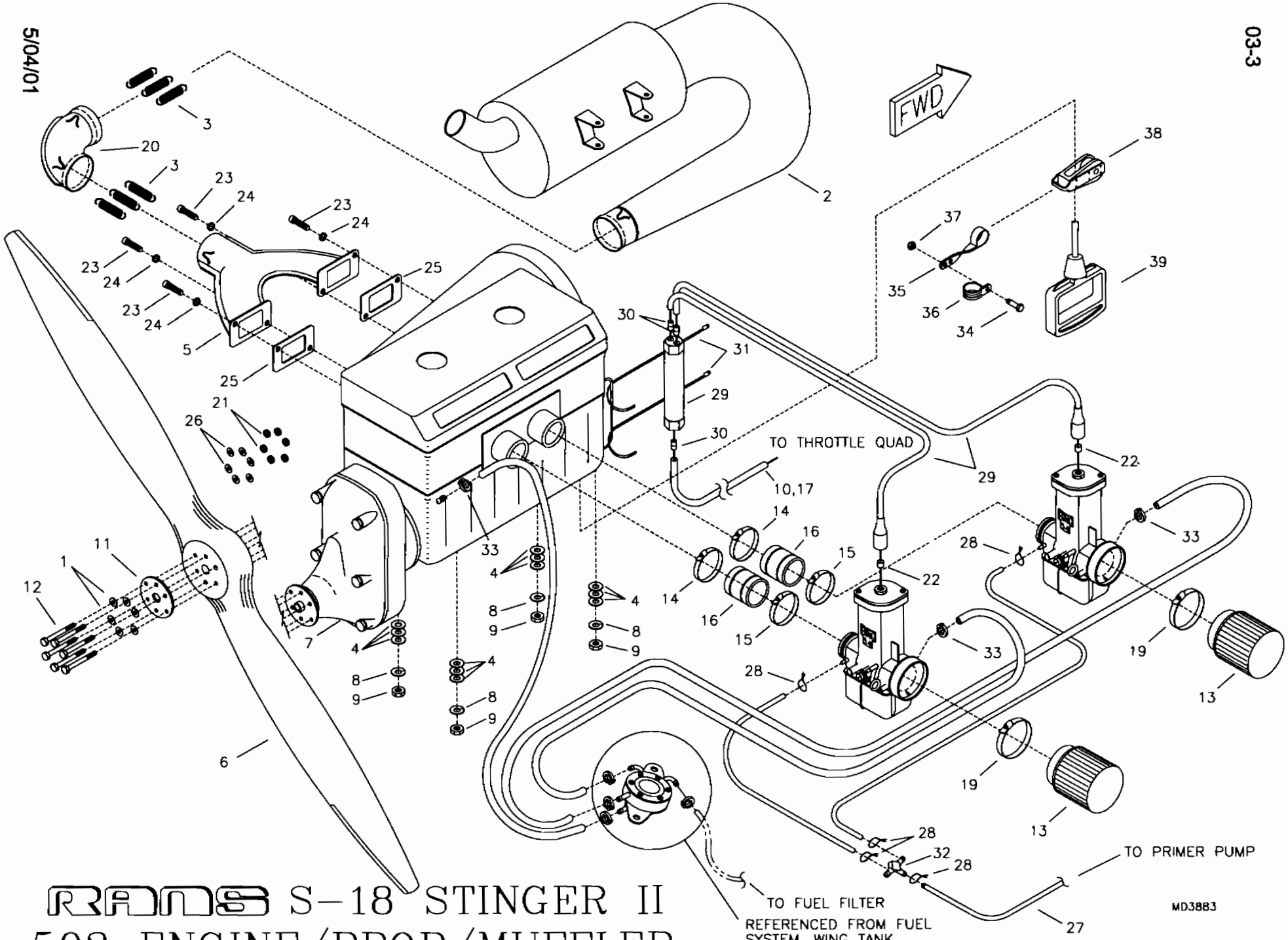

RANS S-18 STINGER II
503 ENGINE/PROP/MUFFLER

S-18 Stinger - 503 Engine / Prop / Muffler

#	DESCRIPTION	PART NUMBER	QUANTITY
1.	1/4" Thick Washer	AN960-416	6
2.	Muffler	KSEX0006	1
3.	Muffler Springs	EG-MUFF-SPRINGS	6
4.	7/16" Thick Washer	AN960-716	12
5.	Exhaust Manifold	KSEX0008	1
6.	Tennessee Wood Propeller	EG-PROP	1
7.	Rotax 503 Engine	EG-EG-503DC	1
8.	Engine Loc Washer *	-----	0
9.	Nut *	-----	0
10.	Throttle Cable	EG-T-CAB	1 pkg
11.	Prop Plate ****	EG-EG-503-11	0
12.	1/4" Bolt	AN4-32A	6
13.	Air Filter, K & N	EG-AF	2
14.	Carb Clamp *	-----	0
15.	Carb Clamp *	-----	0
16.	Carb Boot *	-----	0
17.	Cable Housing, 9'	EG-T-CAB-H	1
18.	Bing Carburetor *	-----	0
19.	Air Filter Clamp **	-----	0
20.	Muffler Elbow	KAEX0008	1
21.	1/4" Tensile Nut	AN365-428A	6
22.	Cable Ferrule Cap	ENDCAP-12000	2
23.	10MM Shoulder Screw *	-----	0
24.	10MM Loc Washer *	-----	0
25.	Exhaust Gasket *	-----	0
26.	1/4" Thin Washer	AN960-416L	6
27.	Dual Primer Pump Kit	DUAL PRIMER(6)	1
28.	Safety Wire	SAFETY WIRE	0
29.	3 Way Throttle Splitter and Cables	KAPW0018	1
30.	Stepped Ferrule ***	-----	0
31.	Zip Ties	ZIP TIES	2
32.	Fuel Line "Y" Connector	8345	1
33.	Line Clamp, 5/16" I.D.	FS-LCL 5/16ID	3
34.	3/16" Bolt	AN3-3A	1
35.	Jib Strap	RL-319	1
36.	3/4" Cushioned Tube Clamp	MS21919-DG12	1
37.	3/16" Tensile Nut	AN365-1032A	1
38.	Pulley	KSHW0040	1
39.	Starter Handle *	-----	0

*Supplied with Engine.
**Supplied with Filter.
***Supplied with Throttle Splitter.
****Supplied with Prop.

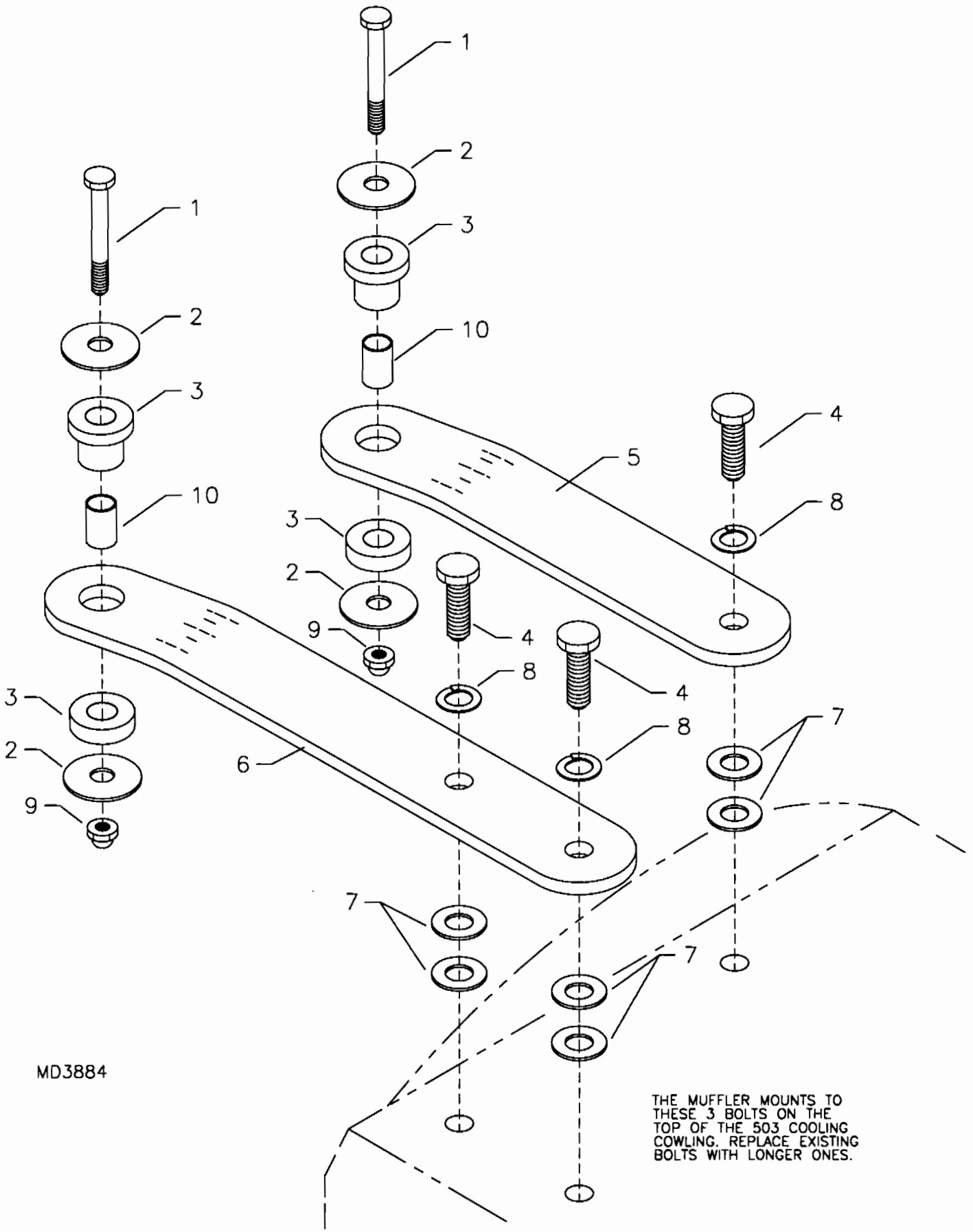

RANS S-18 STINGER II
503 MUFFLER MOUNT

S-18 Stinger - 503 Muffler Mount

#	DESCRIPTION	PART NUMBER	QUANTITY
1.	1/4" Bolt	AN4-20A	2
2.	1/8" Aluminum Washer	EG-AW	4
3.	Barry Mount	22001	2
4.	8MM x 30MM Bolt	M8X30 BOLT	3
6.	AFT Mount Plate	EG-AMP(12/14)	1
7.	5/16" Thick Washer	AN960-516	6
8.	5/16" Loc Washer	AN935-516	3
9.	1/4" Shear Nut	AN364-428A	2
10.	.375 x .058 x 6.00 Aluminum Tubing *	KAAC0038-2	0

*Builder must fabricate from Raw Stock.

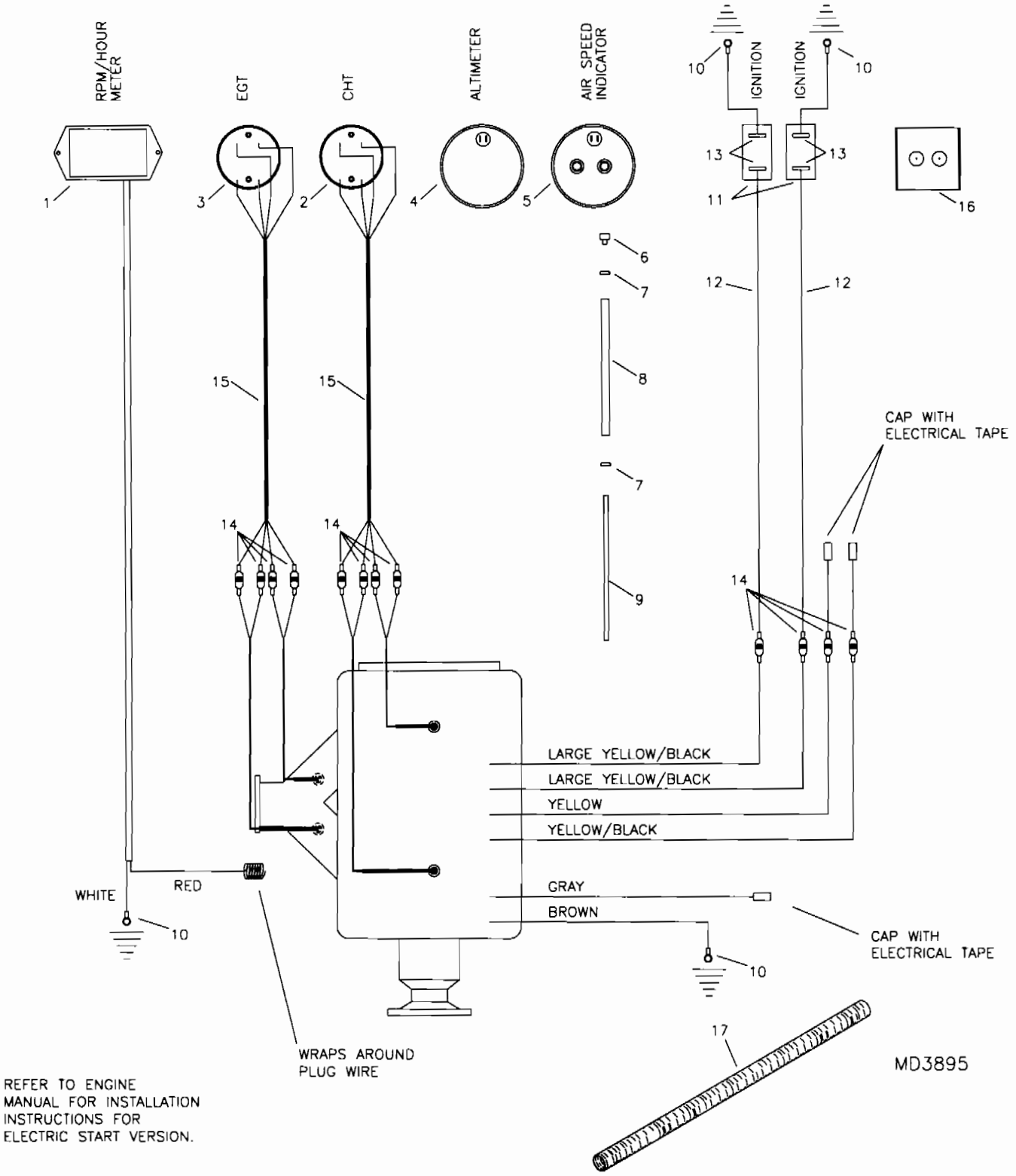

REFER TO ENGINE MANUAL FOR INSTALLATION INSTRUCTIONS FOR ELECTRIC START VERSION.

RANS S-18 STINGER II
503 ELECTRICAL & INSTRUMENTS

S-18 Stinger - 503 Electrical & Instruments - Without Electric Start

NOTE: Gauges may vary, consult directions provided with gauge for wiring diagram.

#	DESCRIPTION	PART NUMBER	QUANTITY
1.	RPM/Hour Meter	KSIP0008	1
2.	Dual Cylinder Head Temperature Gauge	KSPW0012	1
3.	Dual Exhaust Gas Temperature Gauge	KSPW0009	1
4.	Altimeter *	KSAV0001	0
5.	Air Speed Indicator, 0-120	KSAV0004	1
6.	Straight Withdrawal Fitting	8330	1
7.	Line Clamp, 3/8"	FS-LCL 3/8	2
8.	1/4" Blue Pitot/Static Line	FS-FL	2 ft
9.	Pitot Tube	W-ASI-P	1
10.	14 Gauge Eye Terminal, Blue 3/16"	IP-7102	4
11.	Ignition Switch	MS35058-22	2
12.	14 Gauge Black Wire	14 GA WIRE/BLACK	25 ft
13.	14 Gauge Eye Terminal, Blue, 5/32"	KSES0003	4
14.	Female Bullet Terminal	02-09-1103	12
15.	Gray 4 Plex	538260	25 ft
16.	Ignition Switch Guard	KPIP0062	1
17.	1/2" Wire Loom	KSES0023	11 ft

*Optional gauge.

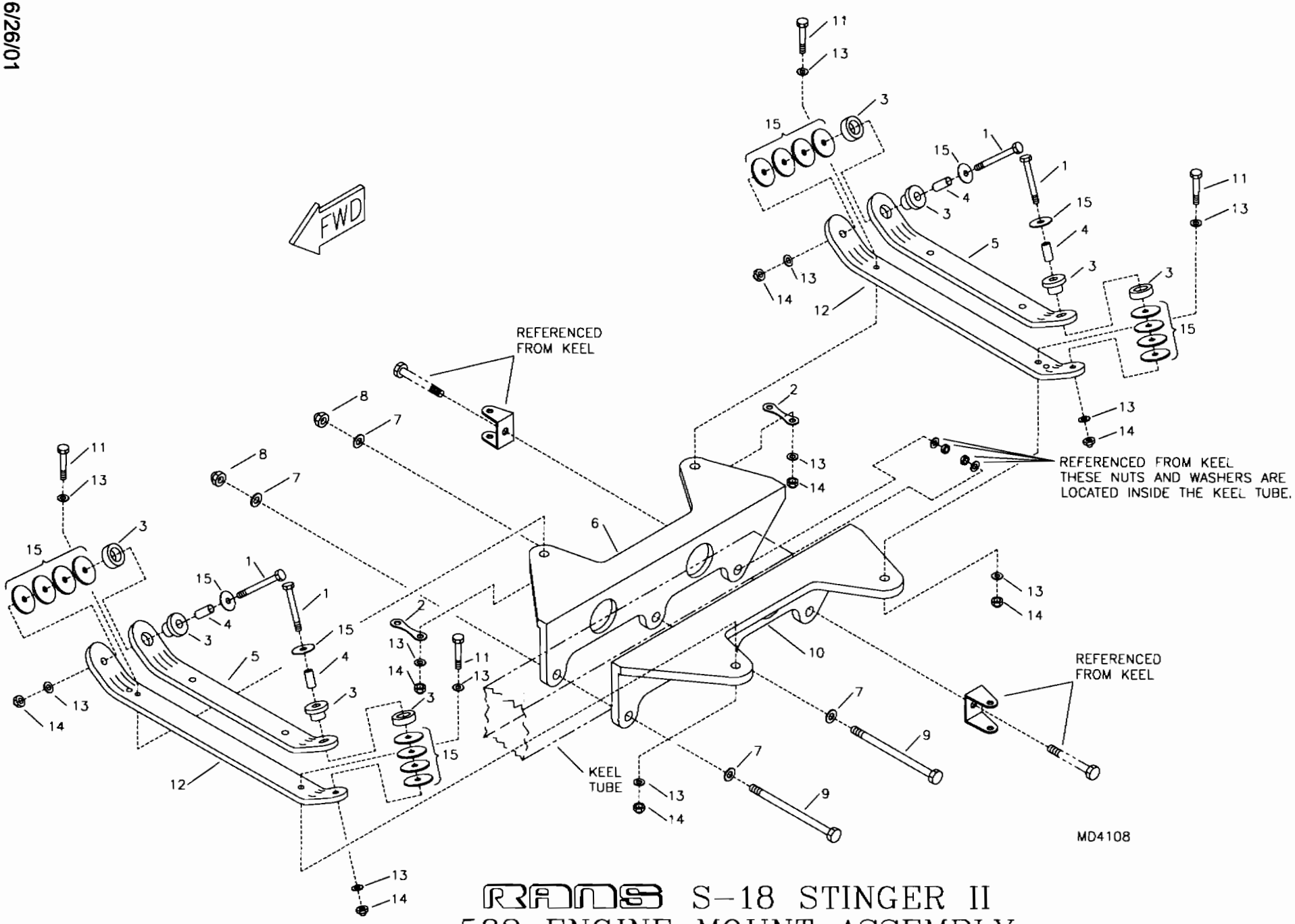

RANS S-18 STINGER II
582 ENGINE MOUNT ASSEMBLY

S-18 Stinger - 582 Engine Mount

#	DESCRIPTION	PART NUMBER	QUANTITY
1.	1/4" Bolt	AN4-25A	4
2.	Hummertang	T12-HT6	2
3.	Barry Mount	22001	4
4.	Spacer Bushing, 1 1/4" x 3/8" x .058	EG-B-3/8X1 1/4	4
5.	Engine Upper Mount Plate	KPPW0063	2
6.	Engine Mount Angle, RH	KPPW0040-RH	1
7.	5/16" Thin Washer	AN960-516L	5
8.	5/16" Shear Nut	AN364-524A	2
9.	5/16" Bolt	AN5-31A	2
10.	Engine Mount Angle, LH	KPPW0040-LH	1
11.	1/4" Bolt	AN4-12A	4
12.	Engine Lower Mount Plate	KPPW0064	2
13.	1/4" Thick Washer	AN960-416	12
14.	1/4" Tensile Nut	AN365-428A	8
15.	1/8" Aluminum Washer	EG-AW	20

GEAR BOX COMES FROM FACTORY IN UP POSITION, MUST BE ROTATED TO DOWN POSITION FOR PROPER ALIGNMENT OF THRUST LINE.

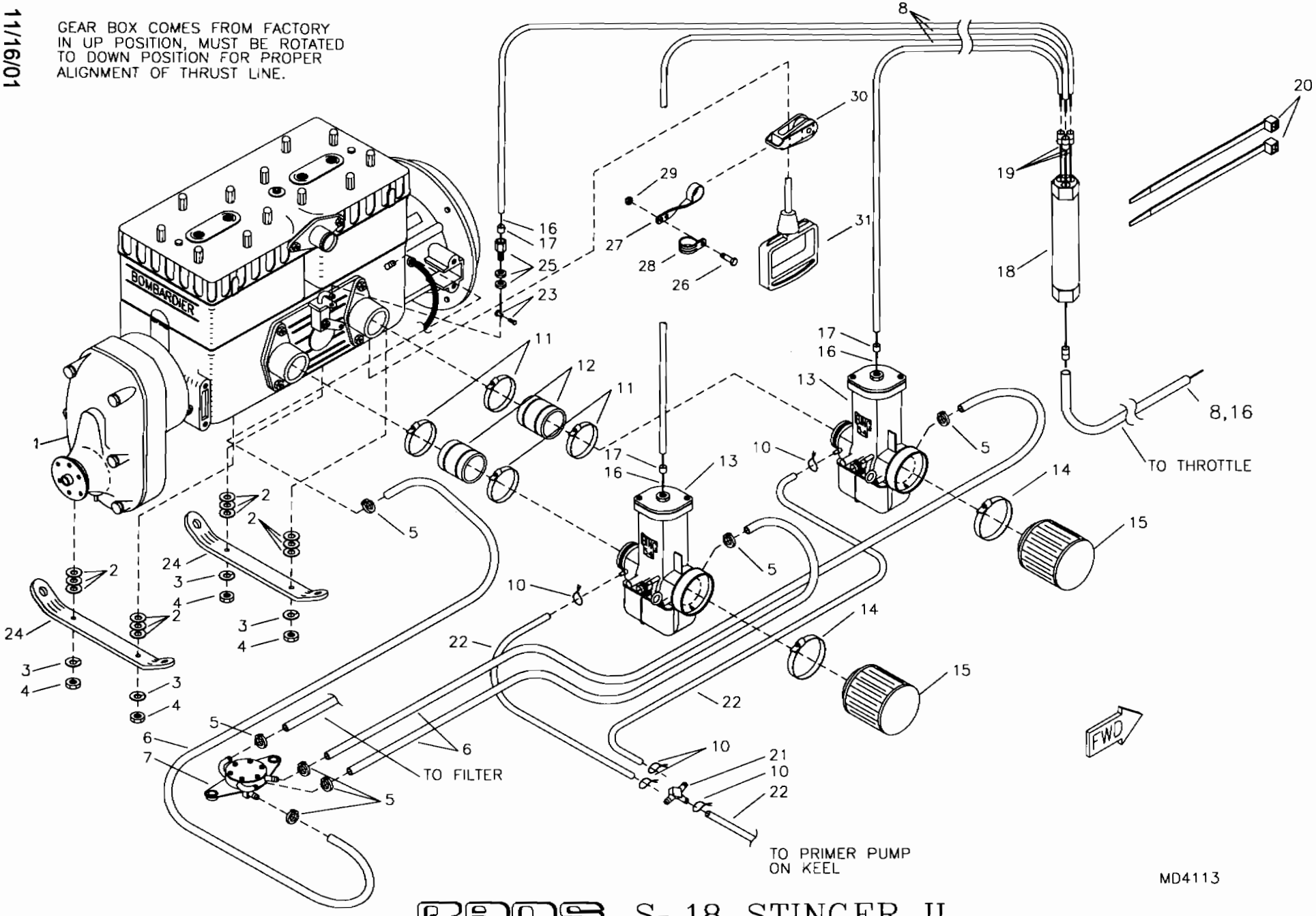

RANS S-18 STINGER II
582 ENGINE

S-18 Stinger - 582 Engine

#	DESCRIPTION	PART NUMBER	QUANTITY
1.	Rotax 582 Engine	EG-EG-582	1
2.	7/16" Thick Washer	AN960-716	12
3.	Loc Washer *	EG-EG-582-1	4
4.	Nut *	EG-EG-582-2	4
5.	Line Clamp, 5/16" I.D.	FS-LCL 5/16ID	7
6.	1/4" Blue Fuel Line **	FS-FL	0 ft
7.	Fuel Pump *	EG-EG-582-3	1
8.	Cable Housing	EG-T-CAB-H	9 ft
9.	Primer Pump Kit	DUAL PRIMER(6)	1
10.	Safety Wire	SAFETY WIRE	0 ft
11.	Carb Clamp *	EG-EG-582-4	4
12.	Carb Boot *	EG-EG-582-5	2
13.	Bing Carburetor *	EG-EG-582-6	2
14.	Air Filter Clamp *	EG-EG-582-7	2
15.	Air Filter, K & N (503/582 filter)	EG-AF	2
16.	Throttle Cable, 447/503SC/503DC	EG-T-CAB	1
17.	Cable Ferrule Cap****	ENDCAP-12000	0
18.	3 Way Throttle Splitter and Cables	KAPW0018	1
19.	Stepped Ferrule ****	-----	0
20.	Short Black Nylon Ties	N-TIES	2
21.	Primer Line Tee *****	PRIME-LINE-T	0
22.	1/8" Primer Line *****	PRIMER LINE	0 ft
23.	Wire Swivel/Screw Stop	2361	1
24.	Focalized Mount Plate ***	EG-FOMP	0 ft
25.	Adjustable Cable Ferrule	2373	1
26.	3/16" Bolt	AN3-3A	1
27.	Jib Strap	RL-319	1
29.	3/16" Tensile Nut	AN365-1032A	1
30.	Pulley	KSHW0040	1
31.	Starter Handle*	-----	0

*Supplied with Engine.
**Referenced from Fuel System. ***Referenced from Engine Mount.
****Supplied with Throttle Splitter. *****Supplied with Primer Kit.

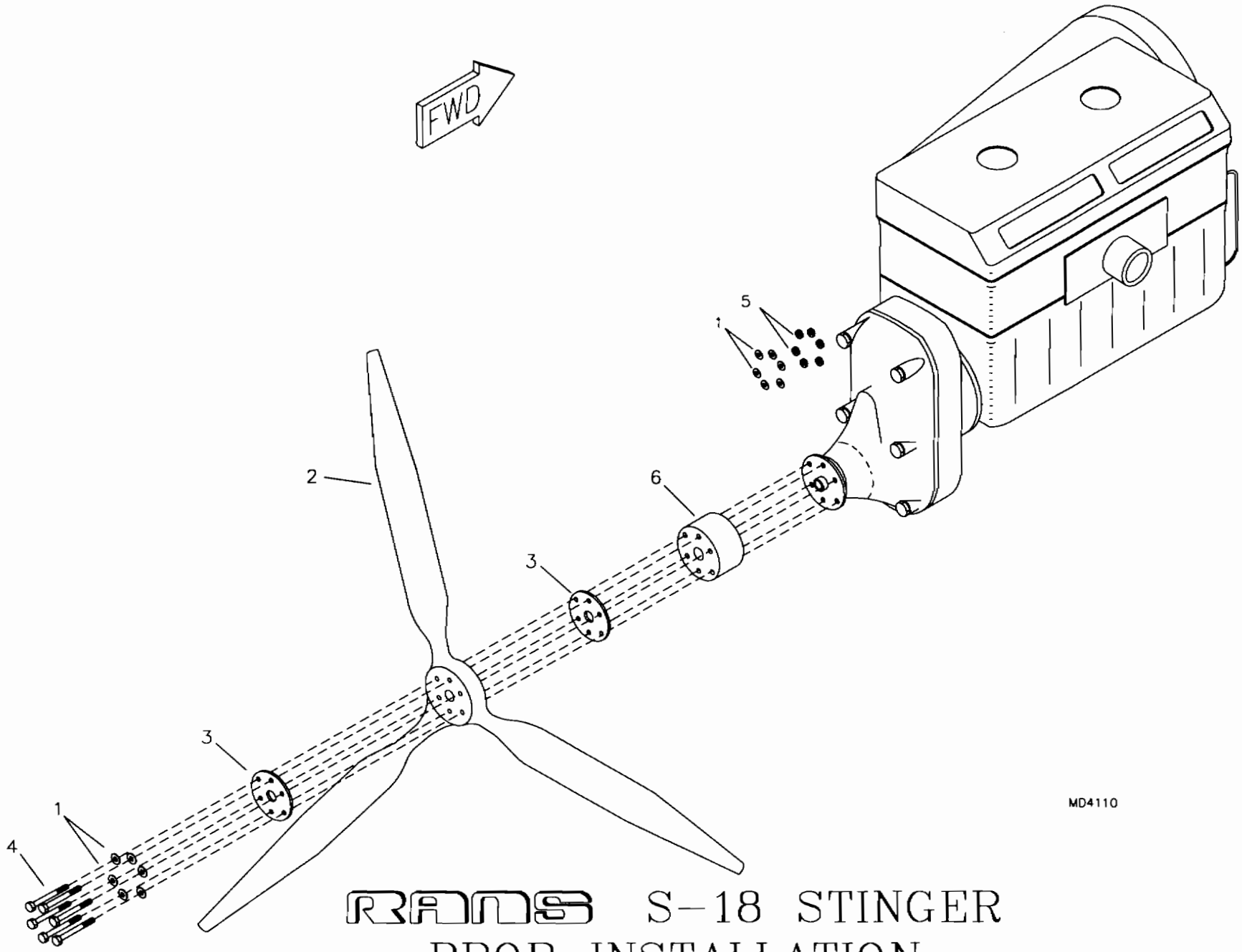

RANS S-18 STINGER
PROP INSTALLATION

S-18 Stinger - 582 Prop Installation

#	DESCRIPTION	PART NUMBER	QUANTITY
1.	5/16" Thick Washer	AN960-516	12
2.	Propeller, 582	KSPW0056	1
3.	Prop Plate *	-----	0
4.	8mm x 120mm Bolt	M8X120 BOLT	6
5.	8MM Nut	8MMX1.25 NUT	6
6.	2" IVO Prop Spacer	2-IVO-SP	1

*Supplied with Prop

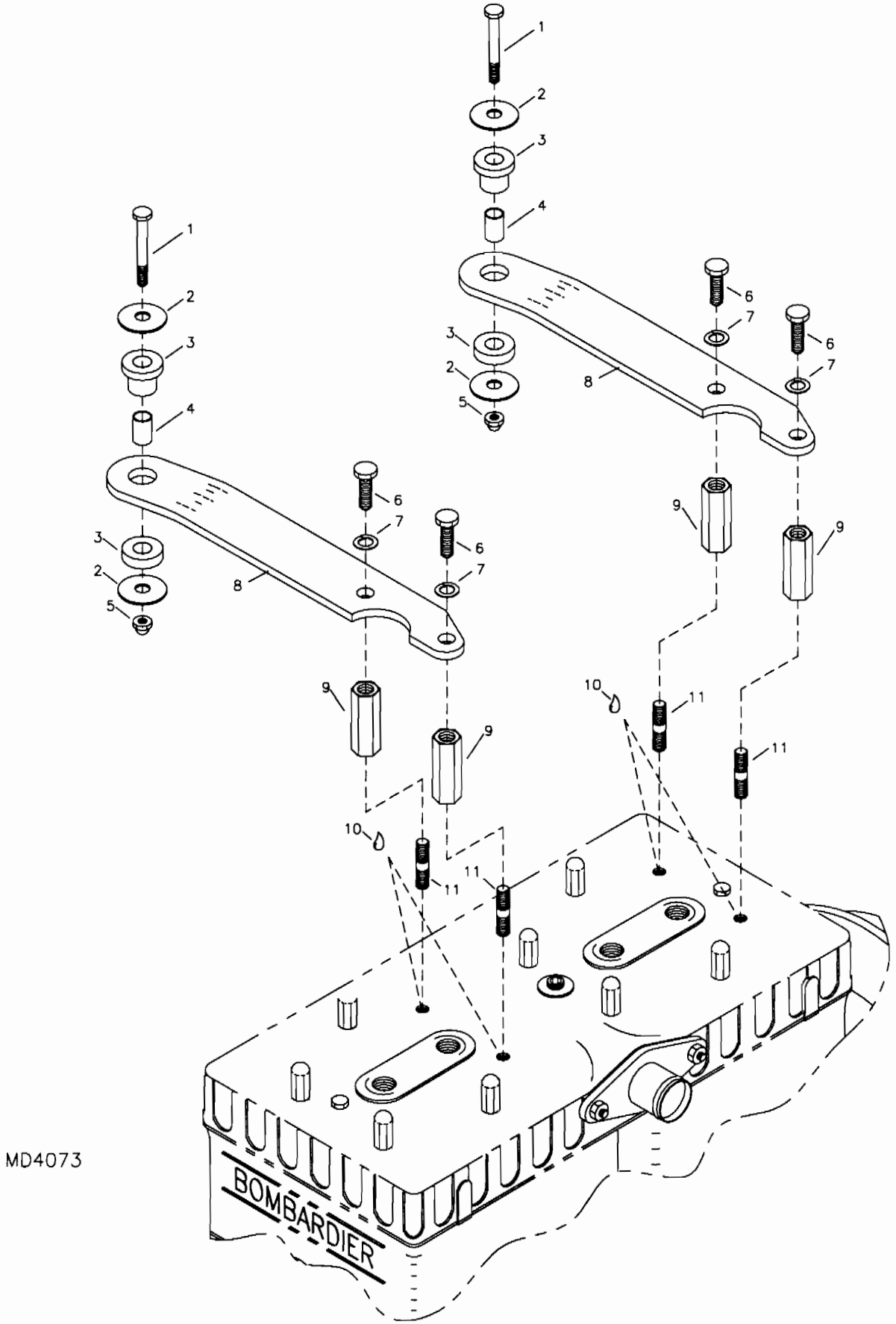

RANS S-18 STINGER II
582 MUFFLER MOUNT

S-18 Stinger - 582 Muffler Mount

#	DESCRIPTION	PART NUMBER	QUANTITY
1.	1/4" Bolt	AN4-22A	2
2.	1/8" Aluminum Washer	EG-AW	4
3.	Barry Mount	22001	2
4.	Spacer Bushing, 1 1/8" x .058 x 3/8" *	EG-B-3/8X1 1/4	2
5.	1/4" Shear Nut	AN364-428A	2
6.	8MM x 20 Bolt	M8X20 BOLT	4
7.	5/16" Loc Washer	AN935-516	4
8.	582 Muffler Mount Plate	EG-582MP	2
9.	8MM x 25 Stand Off	M8X25 SO	4
10.	Loctite Blue	LOC-TITE	0
11.	8mm x 79 Stud **	941-390	4

*Builder must fabricate from Raw Stock.
**Remove bolts from head & install studs with Loc-Tite.
Consult Engine Manual for proper torque values.

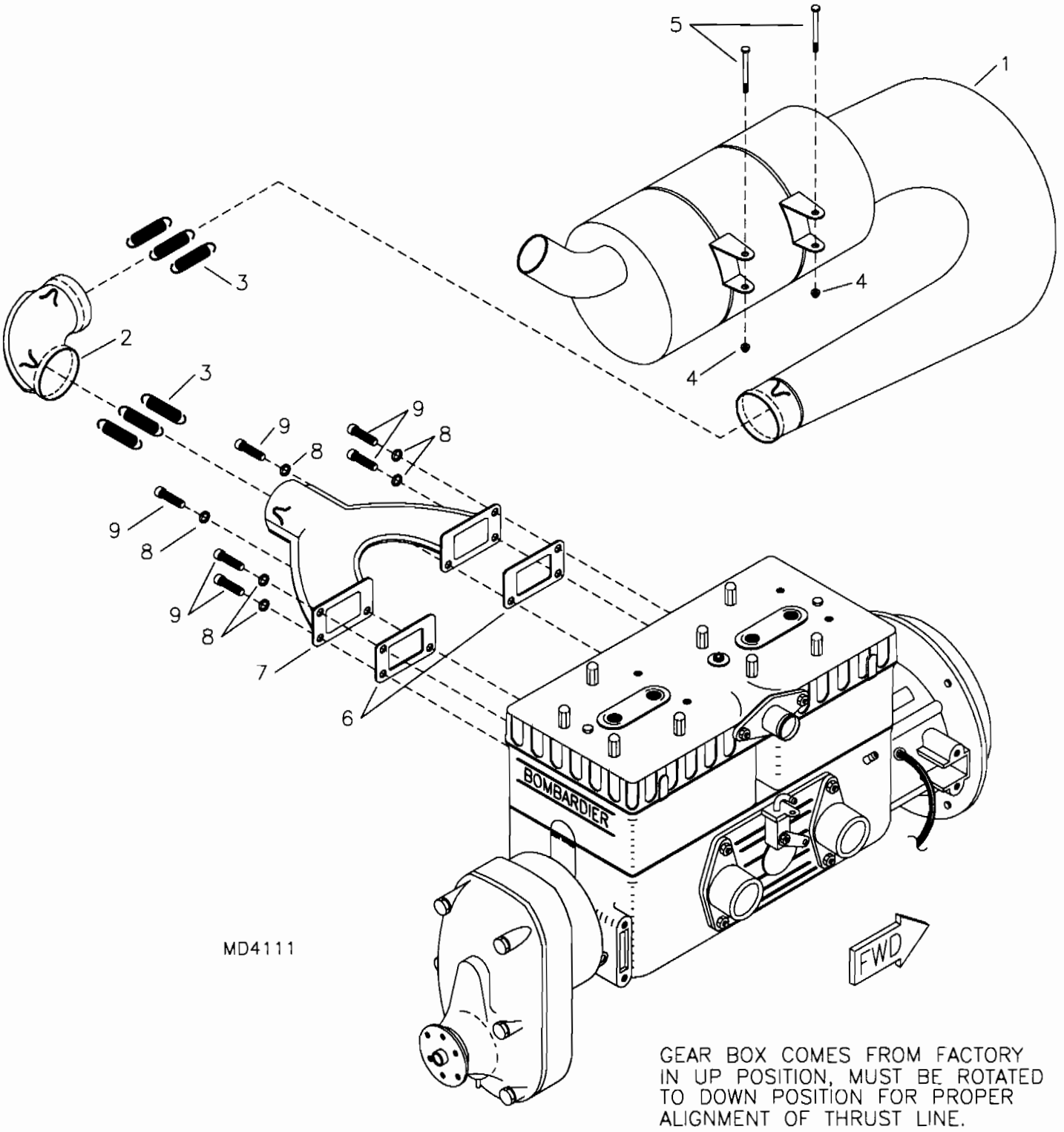

RANS S-18 STINGER II
582 EXHAUST ASSEMBLY

S-18 Stinger - 582 Exhaust Assembly

#	DESCRIPTION	PART NUMBER	QUANTITY
1.	Muffler, 582	KAEX0006	1
2.	Muffler Elbow, 582	KAEX0005	1
3.	Muffler Spring, 582	KSEX0002	6
4.	1/4" Shear Nut	AN364-428A	2
5.	1/4" Bolt	AN4-22A	2
6.	Exhaust Gasket *	-----	0
7.	Exhaust Manifold, 582	KSEX0007	1
8.	10MM Loc Washer *	-----	0
9.	10MM Shoulder Screw *	-----	0

*Supplied with Engine.

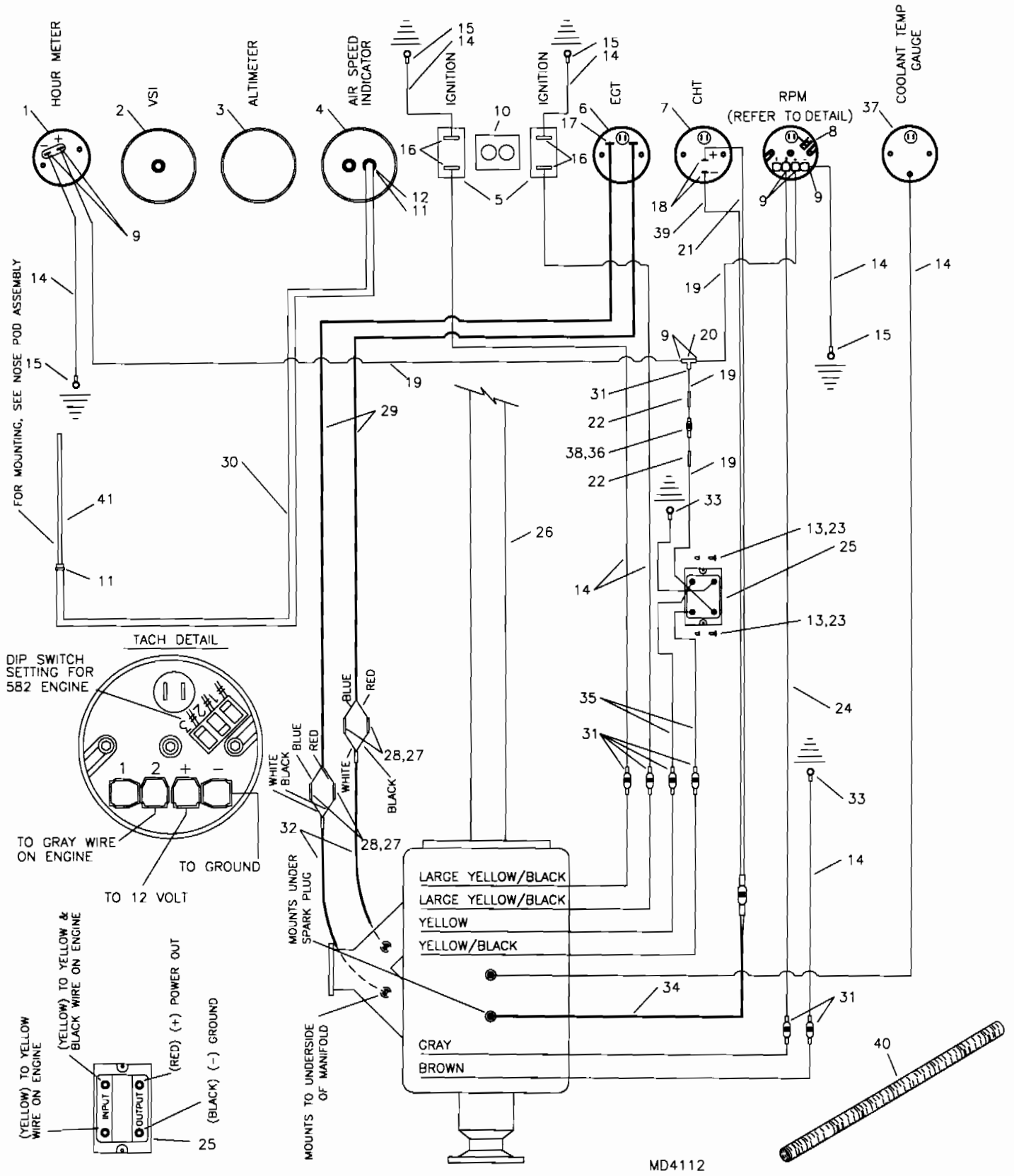

RANS S-18 STINGER II
582 INSTRUMENTS AND ELECTRICAL WITHOUT ELECTRIC START

S-18 Stinger - 582 Electrical & Instruments - Without Electric Start

NOTE: Gauges may vary, consult directions provided with gauge for wiring diagram.

#	DESCRIPTION	PART NUMBER	QUANTITY
1.	Hour Meter	KSPW0022	1
2.	Vertical Speed Indicator - Feet per Minute *	KSAV0008	1
3.	Altimeter *	KSAV0001	1
4.	Air Speed Indicator, 0-120	KSAV0004	1
5.	Ignition Switch	MS35058-22	2
6.	Dual Exhaust Gas Temperature Gauge	KSPW0009	1
7.	Cylinder Head Temperature Gauge *	KSPW0010	1
8.	RPM Gauge	KSPW0028	1
9.	14 Gauge Female Spade Terminal, Blue	IP-7128	7
10.	Ignition Switch Guard	KPIP0062	1
11.	Line Clamp, 3/8"	FS-LCL 3/8	2
12.	Straight Withdrawal Fitting	8330	1
13.	3/16" Bolt	AN3-3A	2
14.	14 Gauge Black Wire	14 GA WIRE/BLACK	30 ft
15.	14 Gauge Eye Terminal, Blue 3/16"	IP-7102	4
16.	14 Gauge Eye Terminal, Blue 5/32"	KSES0003	4
17.	EGT End Plug **	KSPW0008-1	0
18.	Female Terminal ***	KSPW0010-1	0
19.	14 Gauge Red Wire	14 GA WIRE/RED	16 ft
20.	Terminal Y Connector, Brass	IP-YC	1
21.	CHT Wire, Red ***	KSPW0010-2	0
22.	14 Gauge Splice, Butt Connector	IP-7132	2
23.	3/16" Shear Nut	AN364-1032A	2
24.	14 Gauge White Wire	14 GA WIRE/WHITE	12 ft
25.	Regulator/Rectifier	KSES0005	1
26.	Keel ****	KPFU0043	0
27.	Shrink Wrap	KSAC0009	1 ft
28.	Female Bullet Terminal	02-09-1103	10
29.	EGT Wires **	KSPW0008-2	0
30.	1/4" Blue Pitot/Static Line	FS-FL	8 ft
31.	14 Gauge Male Spade Terminal, Blue	IP-7126	7
32.	EGT Probe **	KSPW0008-3	0
33.	14 Gauge Eye Terminal, Blue 1/4"	1/4 EYE 14 GA	2
34.	CHT Probe ***	KSPW0010-3	0
35.	14 Gauge Yellow Wire	14 GA WIRE/YELLOW	6 ft
36.	25 AMP Fuse	KSES0020-25	1
37.	Coolant Temperature Gauge	KSPW0016	1
38.	14 Gauge, In Line Fuse Holder	KSES0019	1
39.	CHT Wire, Black ***	KSPW0010-4	0
40.	1/2" Wire Loom	KSES0023	11 ft
41.	Pitot Tube	W-ASI-P	1

*Optional gauge. **Supplied with EGT. ***Supplied with CHT.
****Referenced from super structure assembly.

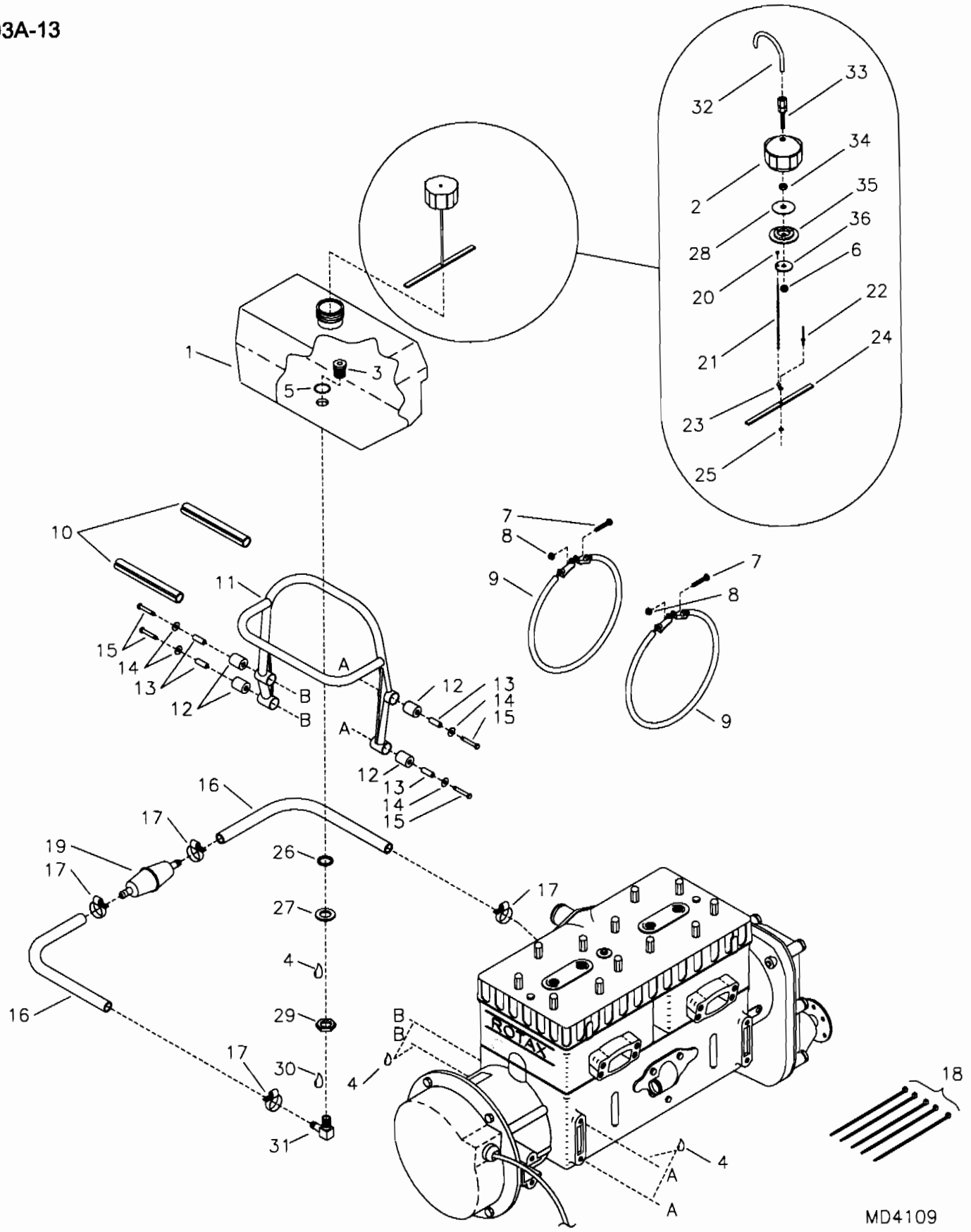

RANS S-18 STINGER II
OPTIONAL 582 OIL INJECTION TANK AND MOUNT ASSEMBLY

S-18 Stinger - Optional 582 Oil Injection Tank and Mount

#	DESCRIPTION	PART NUMBER	QUANTITY
1.	Oil Tank	KPPW0021	1
2.	Fuel Cap	KSFS0007	1
3.	Tank Withdrawal Fitting	KPFS0017	1
4.	Loctite Blue	LOC-TITE	0
5.	O-Ring	KSFS0009	1
6.	1/4" Shear Nut	AN364-428C	1
7.	3/16" Truss Head Bolt	AN526-C1032R12	2
8.	3/16" Shear Nut	AN364-1032A	2
9.	Oil Injection Tank Clamp	KAPW0013	2
10.	7/16" Black Fuel Line	KSFS0005	16 in
11.	Oil Tank Mount	OI-OTMT	1
12.	Rubber Hose	OI-RH3/4	4
13.	Rubber Hose	OI-RH7/16	4
14.	3/16" Large Washer *	AN970-3	4
15.	8MM x 35MM Bolt	M8X35	4
16.	5/16" Black Fuel Line	KSFS0003	24 in
17.	Small Hose Clamp	5-6202	4
18.	Zip Ties	ZIP TIES	5
19.	Oil Filter	414-5365	1
20.	Bead Chain - Retainer Sleeve	KSHW0014	1
21.	#3 Bead Chain	KSHW0012	7 in
22.	1/8" Stainless Steel Pop Rivet - Cherry Q	CCPQ-44	1
23.	Bead Chain - End Coupling	KSHW0013	1
24.	Plastic Retainer	KPFS0012	1
25.	1/8" Small Brass Washer	AN960-B4	1
26.	Rubber Washer	KSFS0010	1
27.	1/2" Thick Washer	AN960-816	1
28.	Plastic Baffle ***	KSFS0012	0
29.	Nut-Flared Tube Bulkhead	AN924-5D	1
30.	Thread Sealant **	KSAC0014	0
31.	90 Withdrawal Fitting	3-83125	1
32.	Vent Tube	KPFS0020	1
33.	Conduit Adjuster Assembly	KSFS0014	1
34.	1/4" Plain Nut	AN345-416	1
35.	Rubber Gasket ***	KSFS0013	0
36.	1/4" Large Washer	AN970-4	1

*Will need to be drilled out to accept an 8mm bolt (5/16 drill bit is acceptable).
**Builder Supplied.
***Supplied with Fuel Cap.

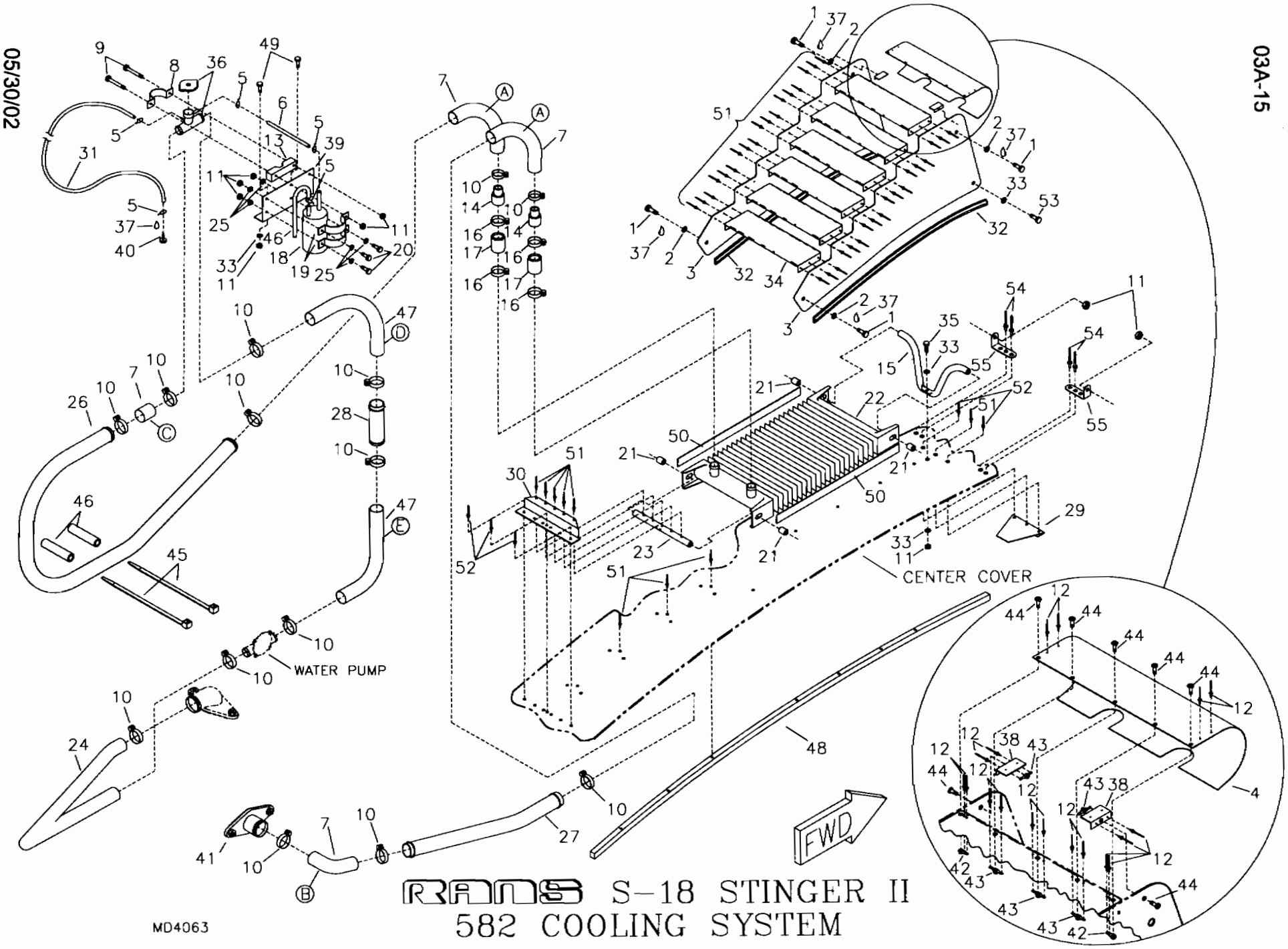

RANS S-18 STINGER II
582 COOLING SYSTEM

S-18 Stinger - 582 Cooling System

#	DESCRIPTION	PART NUMBER	QUANTITY
1.	1/4" Bolt	AN4-7A	4
2.	1/4" Thin Washer	AN960-416L	4
3.	Radiator, Cowling Side	KPFU0341	2
4.	Radiator Cowling-Leading Edge	KPFU0339	1
5.	Safety Wire	SAFETY WIRE	0
6.	5/16" Overflow Hose	EGCS-OFH	1 ft
7.	1" Radiator Hose	KSPW0029	2
8.	Filler "T" Mount	EGCS-FNMSTRAP	1
9.	3/16" Bolt	AN3-14A	2
10.	Hose Clamp, 1 1/2"	5-5216	14
11.	3/16" Shear Nut	AN364-1032A	10
12.	3/32" Aluminum Pop Rivet	40APR1/8	14
13.	Mount Block	EGCS-FNMPVC	1
14.	Reducer Coupler	EGCS-RC	2
15.	Radiator FWD Mount	KPFU0343	1
16.	Hose Clamp, 1 3/4"	5-5220	4
17.	1 1/4" Radiator Hose	EGCS-RHOSE	2
18.	Coolant Recovery Bottle	EGCS-CRB	1
19.	Coolant Recovery Clamp	FS-HS	2
20.	3/16" Bolt	AN3-4A	3
21.	Aluminum Bushing, 3/8" x .058 x 1/4" *	KAAC0038-2	0
22.	Radiator	EGCS-RAD	1
23.	Radiator AFT Mount	EGCS-RAM	1
24.	Molded Hose **	922-520	0
25.	3/16" Thick Washer	AN960-10	6
26.	Cooling Tube, LH, 582	KPPW0187	1
27.	Cooling Tube, RH, 582	KPPW0188	1
28.	Cooling Tube - Union	KPPW0189	1
29.	FWD Radiator Cowl Mount Angle	KPFU0327	1
30.	AFT Radiator Cowl Mount Angle	KPFU0328	1
31.	1/8" Black Fuel Coolant Pressure Line	KSFS0001	18 in
32.	Trimlock Cushion Lip	4100C-1/16	66 in
33.	3/16" Thin Washer	AN960-10L	6
34.	Louver, 582	KPFU0342	6
35.	3/16" Bolt	AN3-10A	1
36.	Filler Cap Tee w/Nipple w/16 lb. Pressure Cap	EGCS-FCT-N	1
37.	Loctite Blue	LOC-TITE	0
38.	Radiator Cover Attach Angles	KPPW0190	2
39.	Filler Tee & Overflow Bottle Bracket	EG-FTOB	1
40.	Cylinder Head Vent **	EG-CYLINDER-HEAD	0
41.	Water Outlet Socket	922-025	1
42.	8-32 Single Ear Nut Plate	MS21051-08	2
43.	8-32 Nut Plate	MS21047-08	5
44.	Pan Head Phillips Bolt (8-32)	KSHW0008	7
45.	Short Black Nylon Ties	N-TIES	2
46.	1/4" Blue Fuel Line (Cut 8")	FS-FL	0
47.	1" Radiator Hose	KSPW0032	1
48.	Upper Rib - Root Rib	KPWI0188	1
49.	3/16" Bolt	AN3-6A	2

*Builder must fabricate from Raw Stock.
**Supplied with Engine.

#	DESCRIPTION	PART NUMBER	QUANTITY
50.	Foam Seal	3/8-FS	4 ft
51.	1/8" Aluminum Pop Rivet - Cherry Q	AAPQ-42	53
52.	1/8" Aluminum Pop Rivet - Cherry Q	AAPQ-41	9
53.	3/16" Bolt	AN3-3A	2
54.	3/16" Aluminum Pop Rivet - Cherry Q	AAPQ-62	4
55.	Trim Tab Hinge	KPAC0004	2

*Builder must fabricate from Raw Stock.

03B-1

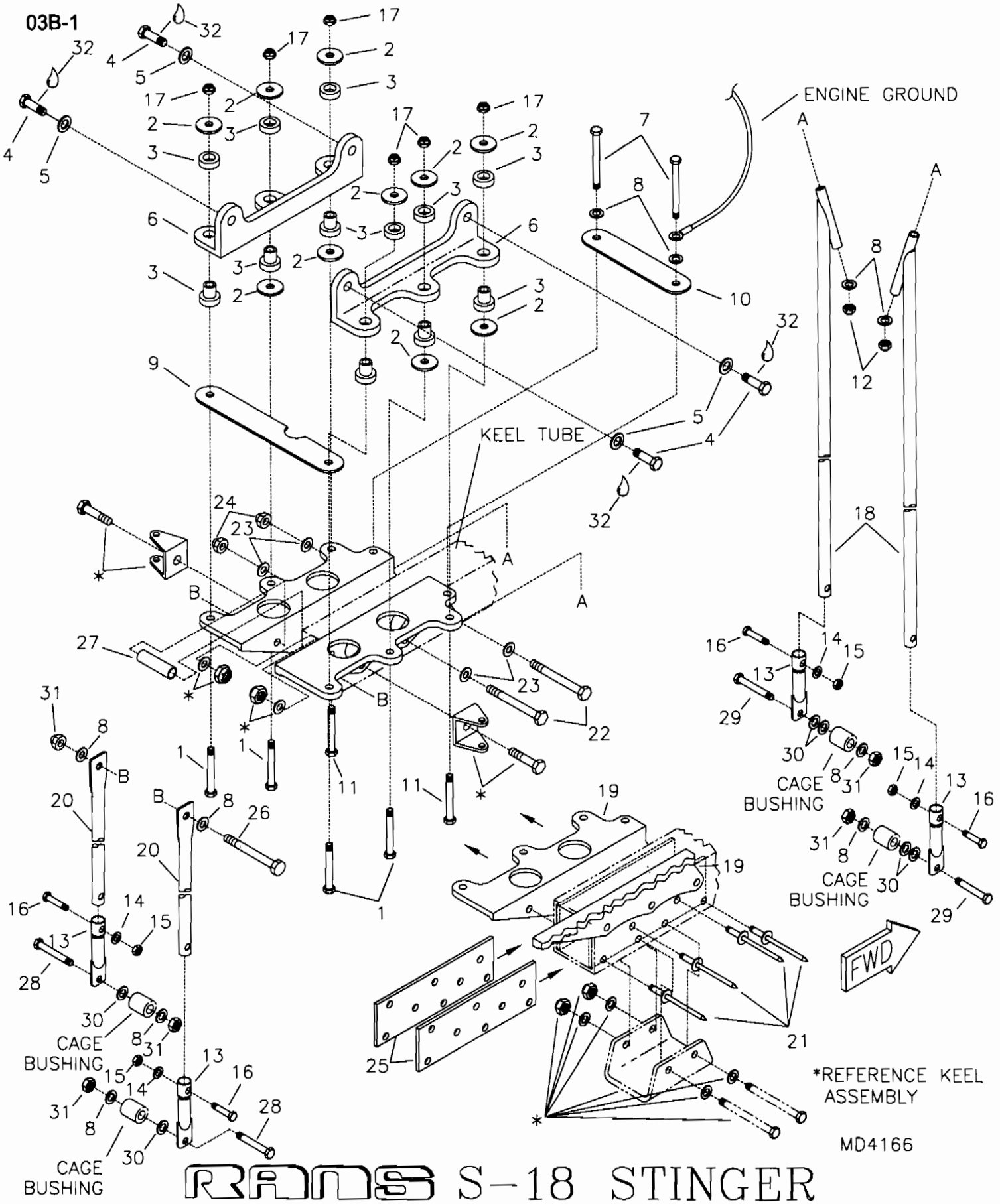

RANS S-18 STINGER
912 ENGINE MOUNT ASSEMBLY

09/12/02

S-18 Stinger - 912 Engine Mount Assembly

#	DESCRIPTION	PART NUMBER	QUANTITY
1.	3/8" Bolt	AN6-23A	4
2.	1/8" Aluminum Washer	EG-AW	10
3.	Barry Mount	22001	6
4.	10MM Bolt	M10 X 35	4
5.	10MM Loc Washer	945-753	4
6.	912 Mount Angle	KPPW0057	2
7.	1/4" Bolt	AN4-24A	2
8.	1/4" Thin Washer	AN960-416L	10
9.	AFT Mount Strap	EG-912-AMS	1
10.	Forward Mount Strap	KPPW0210	1
11.	Low Profile Bolt	AN6-23ALP	2
12.	1/4" Tensile Nut	AN365-428A	2
13.	Torsion Strut End Fitting	KPPW0211	4
14.	3/16" Thin Washer	AN960-10L	4
15.	3/16" Shear Nut	AN364-1032A	4
16.	3/16" Bolt	AN3-10A	4
17.	3/8" Tensile Nut	AN363-624A	6
18.	Torsion Strut - FWD	KPPW0212	2
19.	912 Engine Mount Angle, LH	KPPW0195-L	1
19.	912 Engine Mount Angle, RH	KPPW0195-R	1
20.	Torsion Strut - AFT	KPPW0213	2
21.	3/16" Stainless Steel Pop Rivet - Cherry Q	CCPQ-66	8
22.	5/16" Bolt	AN5-31A	2
23.	5/16" Thin Washer	AN960-516L	4
24.	5/16" Shear Nut	AN364-524A	2
25.	Keel Reinforcement	KPPW0196	2
26.	1/4" Bolt	AN4-34A	1
27.	Aluminum Bushing 3/8 X .058 X 2	SB-3/8X3	1
28.	1/4" Bolt	AN4-15A	2
29.	1/4" Bolt	AN4-16A	2
30.	1/4" Thick Washer	AN960-416	6
31.	1/4" Shear Nut	AN364-428A	5
32.	Loc-Tite	LOC-TITE	0

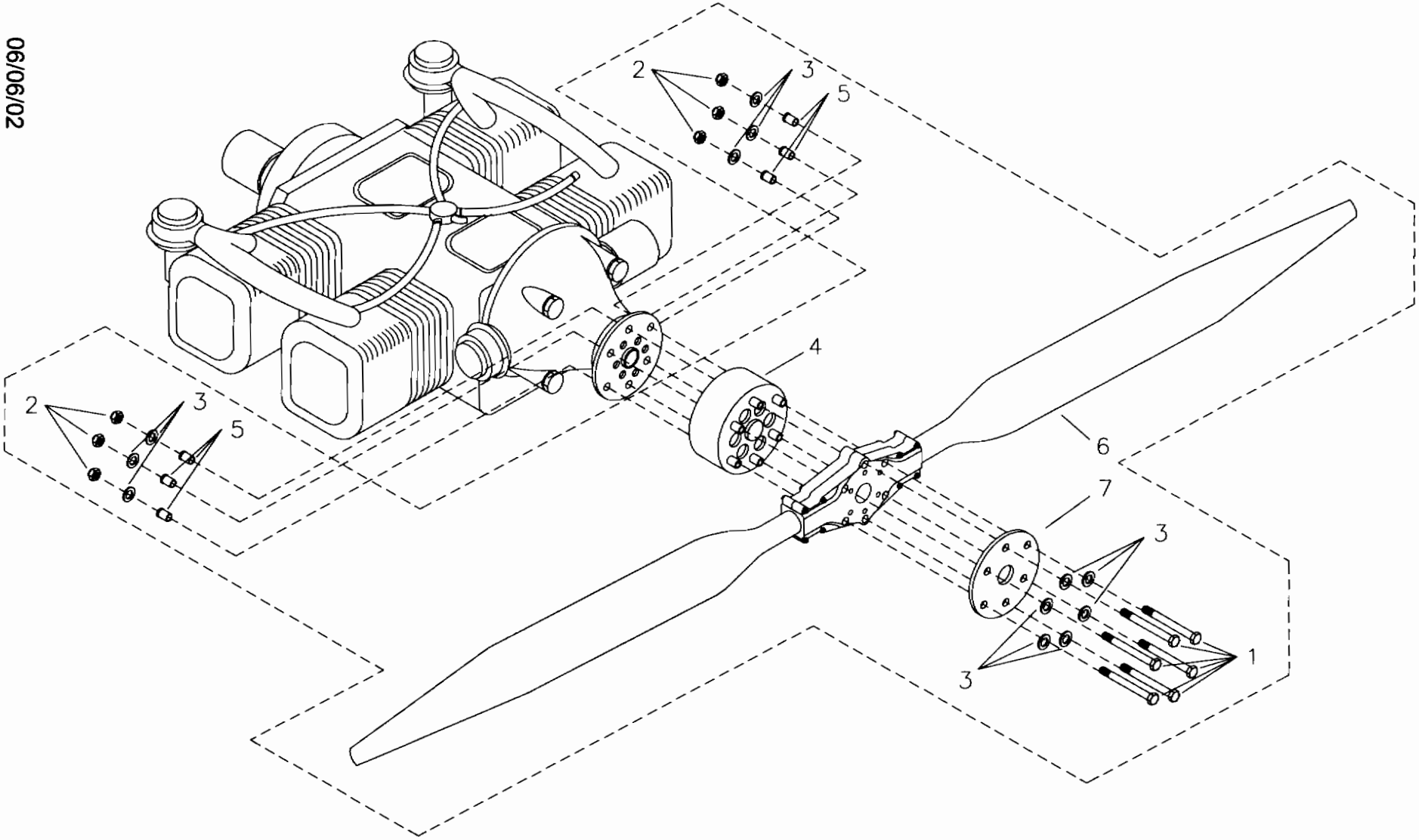

MD4256

RANS S-18 STINGER
WARP DRIVE PROP INSTALLATION

S-18 Stinger - 912 Warp Drive Prop Installation

#	DESCRIPTION	PART NUMBER	QUANTITY
1.	5/16" Bolt	AN5-52A	6
2.	5/16" Tensile Steel Loc Nut	AN365-524C	6
3.	5/16" Thin Washer	AN960-516L	12
4.	2" Prop Extension - 912	KAPW0021	1
5.	Flange Bushing - 912	KPPW0038	6
6.	Warp Drive Propeller, 68"	WARP	1
7.	Crush Plate *	-----	0

*Supplied with Engine

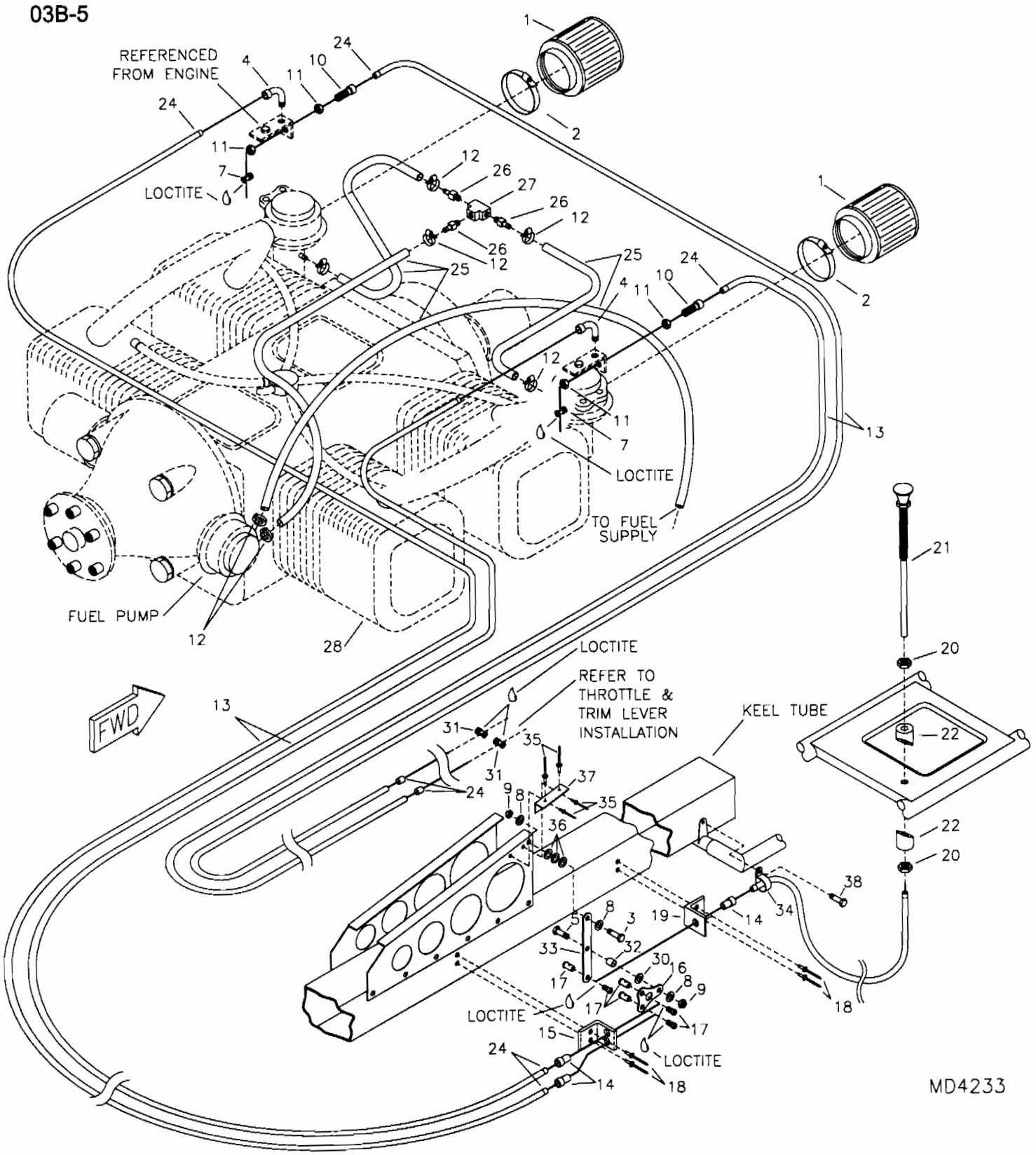

RANS S-18 STINGER
912 ENGINE, THROTTLE/FUEL HOOK UPS

S-18 Stinger - 912 Engine, Throttle/Fuel Hook Ups

#	DESCRIPTION	PART NUMBER	QUANTITY
1.	Air Filter, K & N (503/582 filter)	EG-AF	2
2.	63MM Clamp *	EG-AF-CLAMP	2
3.	3/16" Bolt	AN3-7A	1
4.	Choke Cable Guide **	EG-EG-912-1	2
5.	3/16" Bolt	AN3-5A	1
6.	Throttle Cable	EG-CAB-12	2
7.	Wire Stop Screw **	EG-EG-912-2	0
8.	3/16" Thick Washer	AN960-10	3
9.	3/16" Shear Nut	AN364-1032A	2
10.	Throttle Adjust Ferrule **	EG-EG-912-3	2
11.	1/8" Ferrule Nut **	EG-EG-912-4	0
12.	Small Hose Clamp	5-6202	7
13.	Cable Housing	EG-T-CAB-H	28 ft
14.	Cable Conduit Ferrule	2394	3
15.	Double Choke Cable Stop	CK-DCS	1
16.	Mixer Plate - Long	KPPW0249	1
17.	Wire Swivel/Screw Stop	2361	4
18.	1/8" Stainless Steel Pop Rivet - Cherry Q	CCPQ-44	4
19.	Choke Cable Stop	CK-CS	1
20.	Choke Assembly Nut ***	4-336-1	0
21.	Choke Assembly Washer ***	4-336-2	0
22.	Beveled Washer	KPIP0029	2
23.	Choke Assembly Control Cable	48701-0-96	1
24.	Cable Ferrule Cap	ENDCAP-12000	8
25.	1/4" Black Fuel Line	27002A	10 ft
26.	Straight Withdrawal Fitting	8330	3
27.	1/8" Brass Tee Fitting	3-20120	1
28.	912 Engine	EG-EG-912	1
29.	Choke Cable	BC-105	2
30.	1/4" Thick Washer	AN960-416	1
31.	Wire Swivel/Screw Stop	2361	2
32.	Aluminum Bushing, 1/4 X .028 X 1/4"	KAAC0038-5	0
33.	Choke Pivot Arm	KPPW0250	1
34.	Cushioned Tube Clamp	MS21919-WDG3	1
35.	1/8" Aluminum Rivet	AAPQ-42	4
36.	3/16" Plastic Washer	PW-3	3
37.	Choke Reinforcement Angle	KPPW0251	1
38.	3/16" Bolt (Canopy Only) ****	AN3-24A	1

*Supplied with air filter.
**Supplied with engine.
***Supplied with Choke Assembly ****AN3-25A if installing canopy.

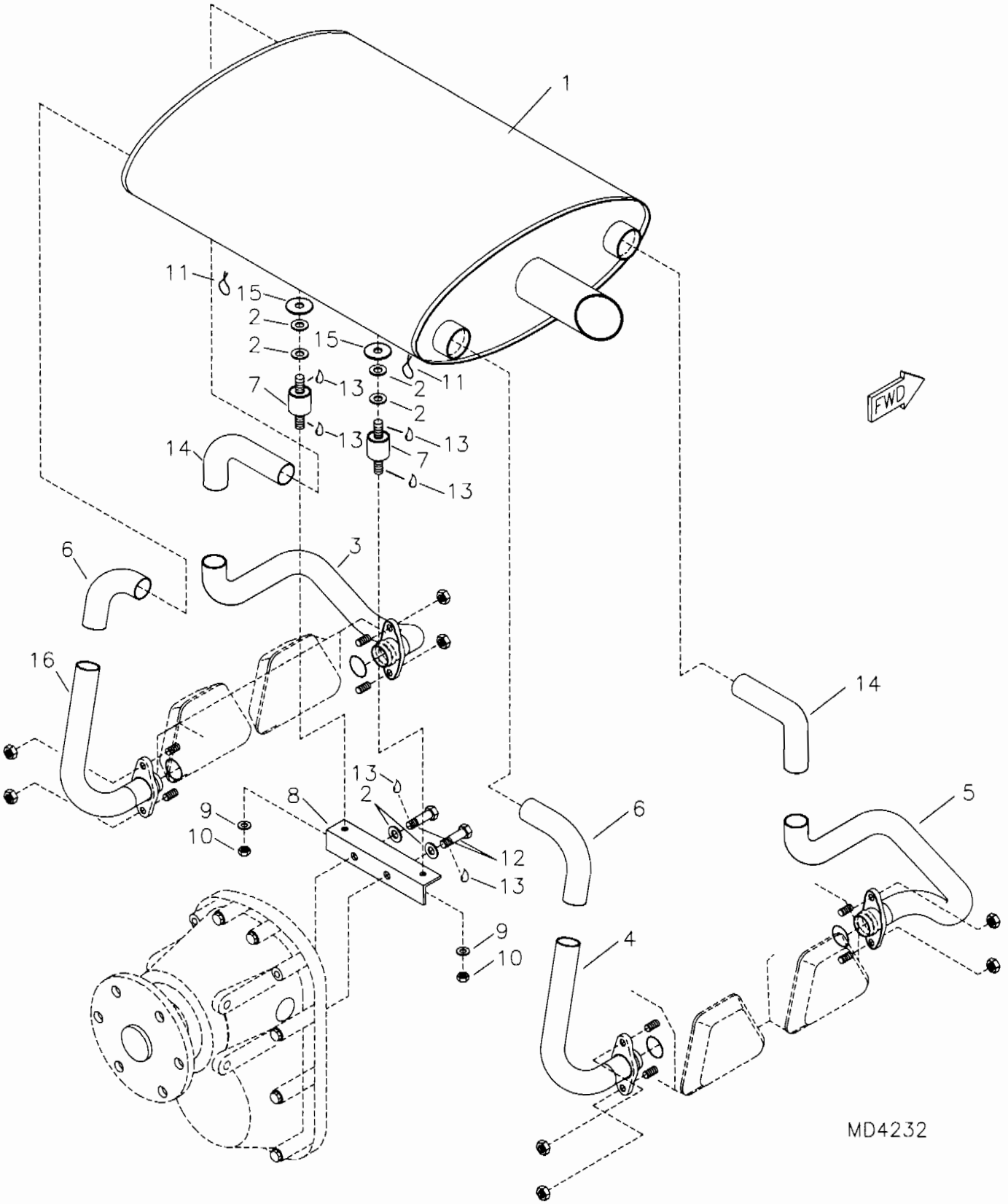

RANS S-18 STINGER EXHAUST ASSEMBLY - 912

S-18 Stinger - 912 Exhaust Assembly

#	DESCRIPTION	PART NUMBER	QUANTITY
1.	912 Muffler, S-12, S-18	KPEX0058	1
2.	1/4" Thick Washer	AN960-416	6
3.	S-12, S18 Forward Lower Manifold, LH	KPEX0059	1
4.	S-12, S-18 AFT Lower Manifold	KPEX0061	1
5.	S-12, S-18 Forward Lower Manifold, RH	KPEX0060	1
6.	S-12, S-18 AFT Upper Manifold	KPEX0062	2
7.	Rubber Isolator	EG-RI	2
8.	Muffler Mount Angle	KPEX0010	1
9.	6 MM Loc Washer *	AN935-416L	0
10.	6 MM Nut *	6MM NUT	0
11.	Safety Wire	SAFETY WIRE	0 ft
12.	6MM x 16MM Bolt	M6X16 BOLT	2
13.	Loctite Blue	LOC-TITE	0
14.	S-12, S-18 Forward Upper Manifold	KPEX0063	2
15.	1/8" Aluminum Washer	EG-AW	2
16.	S-12, S-18 AFT Lower Manifold, LH	KPEX0066	1

*Supplied with rubber isolator.

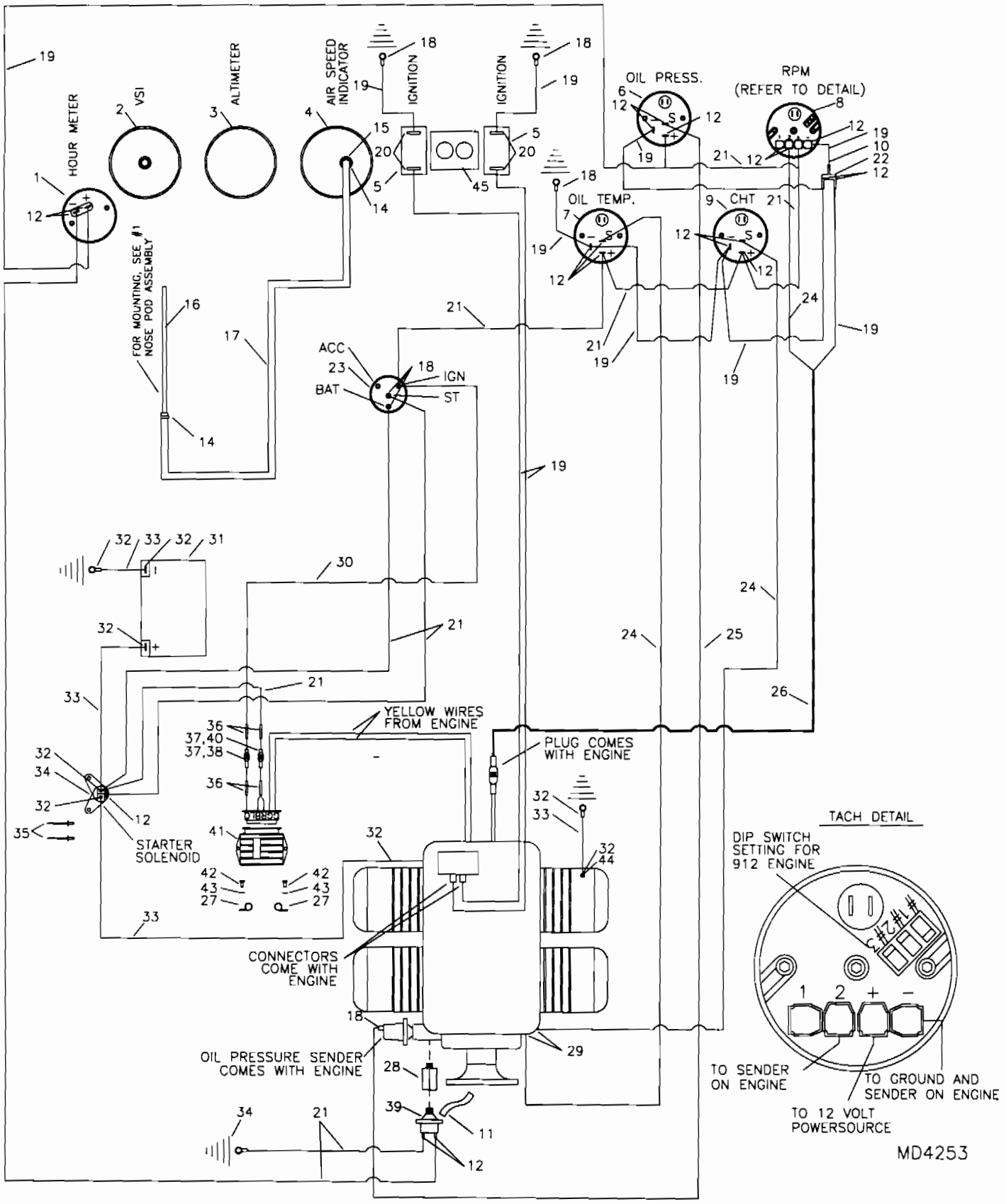

RANS S-18 STINGER
912 INSTRUMENTS AND ELECTRICAL

S-19 Stinger - 912 Instruments & Electrical

NOTE: Gauges may vary, consult directions provided with gauge for wiring diagram.

#	DESCRIPTION	PART NUMBER	QUANTITY
1.	Hour Meter	KSPW0022	1
2.	Vertical Speed Indicator - Feet per Minute *****	KSAV0008	1
3.	Altimeter *****	KSAV0002	1
4.	Air Speed Indicator, 0-120	KSAV0004	1
5.	Ignition Switch	MS35058-22	2
6.	Oil Pressure Gauge	KSPW0019	1
7.	Oil Temperature Gauge *	KSPW0017	1
8.	RPM Gauge	KSPW0028	1
9.	Cylinder Head Temperature Gauge *	KSPW0017	1
10.	14 Gauge Male Spade Terminal, Blue	IP-7126	1
11.	Teflon Tape ****	TEFLON TAPE	0
12.	14 Gauge Female Spade Terminal, Blue	IP-7128	16
13.	90 Withdrawal Fitting	8342	1
14.	Line Clamp, 3/8"	FS-LCL 3/8	2
15.	Straight Withdrawal Fitting	8330	2
16.	Pitot Tube	W-ASI-P	1
17.	1/4" Blue Fuel Line	FS-FL	30 in
18.	14 Gauge Eye Terminal, Blue 3/16"	IP-7102	8
19.	14 Gauge Black Wire	14 GA WIRE/BLACK	31 ft
20.	14 Gauge Eye Terminal, Blue 5/32"	KSES0003	4
21.	14 Gauge Red Wire	14 GA WIRE/RED	50 ft
22.	Terminal Y Connector, Brass	IP-YC	1
23.	Key Start Switch	25-6	1
24.	14 Gauge Yellow Wire	14 GA WIRE/YELLOW	26 ft
25	14 Gauge White Wire	14 GA WIRE/WHITE	13 ft
26.	2 Plex 20 Gauge Wire	62181-DELL	12 ft
27.	Cushion Clamp	MS21919-WDG14	2
28.	Steel Nipple Fitting	KSPW0062	1
29.	550B Spade Terminal	550B SPADE TERM	4
30.	14 Gauge Green Wire	14 GA WIRE/GREEN	15 ft
31.	Battery - 912 **	PS12150-NB	0
32.	4 Gauge Eye Cable Terminal	4 GA CABLE LUG	8
33.	4 Gauge Battery Cable, Black Wire	4 GA WIRE/BLACK	16 ft
34.	14 Gauge Eye Terminal, Blue 1/4"	1/4 EYE 14 GA	3
35.	3/16" Aluminum Pop Rivet - Cherry Q	AAPQ-64	2
36.	14 Gauge Splice, Butt Connector	IP-7132	4
37.	14 Gauge, In Line Fuse Holder	KSES0019	2
38.	25 AMP Fuse	KSES0020-25	1
39.	Oil Pressure Switch	KSES0004	1
40.	30 AMP Fuse	KSES0020-30	1
41.	Regulator/Rectifier ***	EG-EG-912-5	0
42.	3/16" Bolt	AN3-5A	2
43.	3/16" Thin Washer	AN960-10L	2
44.	6 MM X 16 MM Bolt	M6X16 BOLT	1
45.	Ignition Switch Guard	KPIP0062	1

*Oil Tempurature and CHT use the same type of gauge.
**Referenced from 912 battery box installaion. ***Supplied with engine.
****Builder provides. *****Optional gauge.

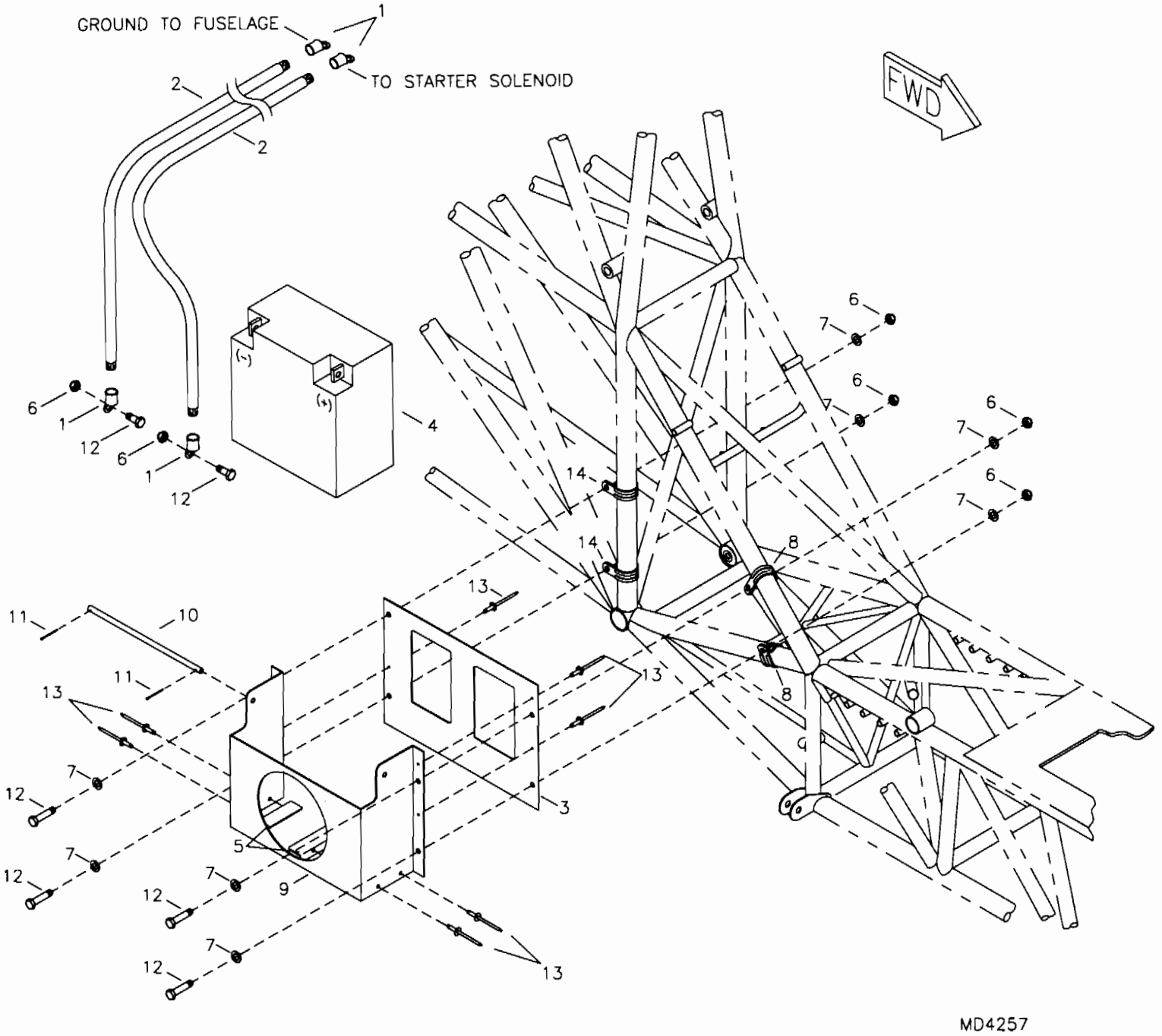

RANS S-18 STINGER
912 BATTERY BOX INSTALLATION

S-18 Stinger - 912 Battery Box Installation

#	DESCRIPTION	PART NUMBER	QUANTITY
1.	4 Gauge Eye Cable Terminal *	4 GA CABLE LUG	0
2.	4 Gauge Battery Cable, Black Wire *	4 GA WIRE/BLACK	0 ft
3.	Battery Box Mount Plate	BAT-BOX-2	1
4.	Battery	PS12150-NB	1
5.	Battery Box Support Angle	BAT-BOX-3	2
6.	3/16" Shear Nut	AN364-1032A	6
7.	3/16" Thick Washer	AN960-10	8
8.	3/4" Cushioned Tube Clamp	MS21919-DG12	2
9.	Battery Box Front Plate	BAT-BOX-1	1
10.	Battery Bar	BAT-BAR-503/582	1
11.	Small Cotter Pin	MS24665-134	2
12.	3/16" Bolt	AN3-3A	6
13.	1/8" Aluminum Pop Rivet - Cherry Q	AAPQ-42	11
14.	7/8" Cushioned Tube Clamp	MS21919-WDG14	2

*Referenced from 912 Instruments and Electrical.

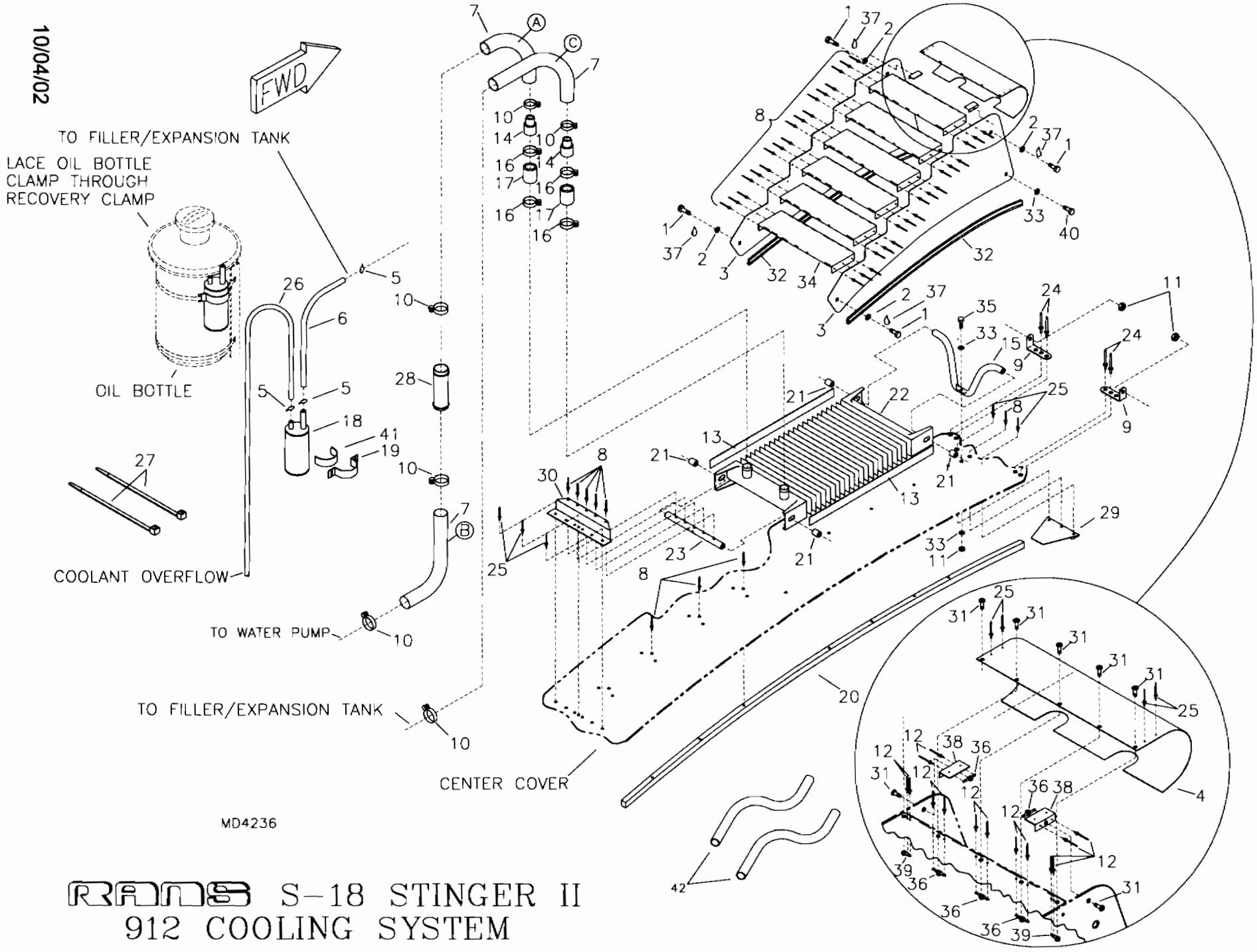

RAMS S-18 STINGER II
912 COOLING SYSTEM

S-18 Stinger - 912 Cooling System

#	DESCRIPTION	PART NUMBER	QUANTITY
1.	1/4" Bolt	AN4-7A	4
2.	1/4" Thin Washer	AN960-416L	4
3.	Radiator, Cowling Side	KPFU0365	2
4.	Radiator Cowling-Leading Edge	KPFU0339	1
5.	Safety Wire	SAFETY WIRE	0
6.	5/16" Overflow Hose	EGCS-OFH	24 in
7.	Pre-Formed Coolant Hose **	KSPW0032	2
8.	1/8" Aluminum Pop Rivet - Cherry Q	AAPQ-42	53
9.	Trim Tab Hinge	KPAC0004	2
10.	Hose Clamp, 1 1/2"	5-5216	6
11.	3/16" Shear Nut	AN364-1032A	3
12.	3/32" Aluminum Pop Rivet	40APR1/8	14
13.	Foam Tape, 3/8" x 1/2"	FOAM TAPE	4 ft
14.	Reducer Coupler	EGCS-RC	2
15.	Radiator FWD Mount	KPFU0366	1
16.	Hose Clamp, 1 3/4"	5-5220	4
17.	1 1/4" Radiator Hose	EGCS-RHOSE	2
18.	Coolant Recovery Bottle	EGCS-CRB	1
19	Cooland Recovery Clamp	KPPW0058	1
20	Upper Rib - Root Rib	KPWI0188	1
21.	Aluminum Bushing, 3/8" x .058 x 1/4" *	KAAC0038-2	0
22.	Radiator	EGCS-RAD	1
23.	Radiator AFT Mount	EGCS-RAM	1
24.	3/16" Aluminum Pop Rivet - Cherry Q	AAPQ-62	4
25.	1/8" Aluminum Pop Rivet - Cherry Q	AAPQ-41	17
26.	1/4" Blue Fuel Line	FS-FL	0
27.	Short Black Nylon Ties	N-TIES	2
28.	Cooling Tube - Union	KPPW0189	1
29.	FWD Radiator Cowl Mount Angle	KPFU0327	1
30.	AFT Radiator Cowl Mount Angle	KPFU0328	1
31.	Pan Head Phillips Bolt (8-32)	KSHW0008	7
32.	Trimlock Cushion Lip	4100C-1/16	66 in
33.	3/16" Thin Washer	AN960-10L	6
34.	Louver, 582	KPFU0342	6
35.	3/16" Bolt	AN3-10A	1
36.	8-32 Nut Plate	MS21047-08	5
37.	Loctite Blue	LOC-TITE	0
38.	Radiator Cover Attach Angles	KPPW0190	2
39.	8-32 Single Ear Nut Plate	MS21051-08	2
40.	3/16" Bolt	AN3-3A	2
41.	1" Black Foam Tape	KSAC0011	1 ft
42.	Pre-Formed Radiator "S" Hose	KSPW0025	2

*Builder must fabricate from Raw Stock.
**Builder modifies.

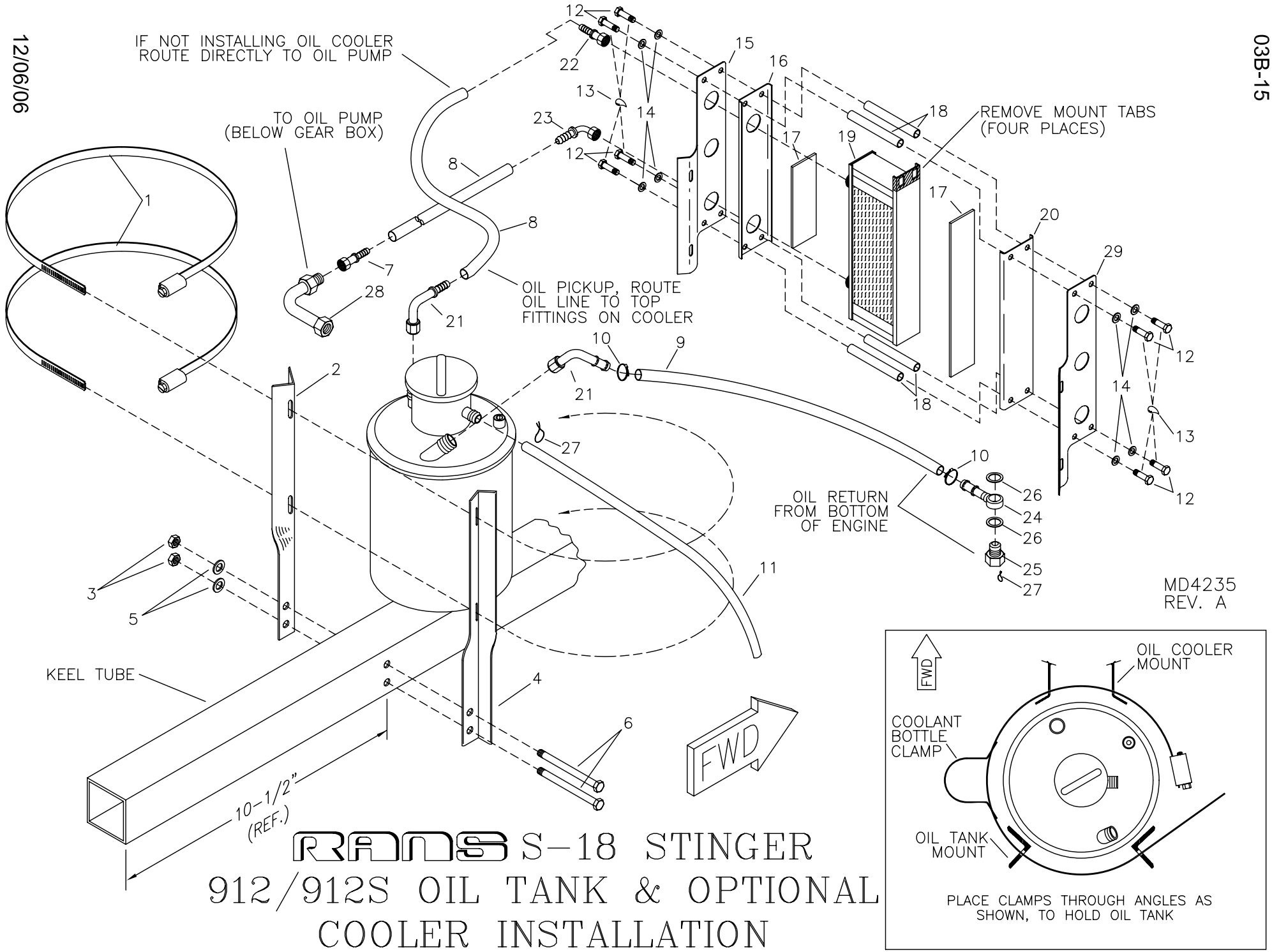

RANS S-18 STINGER
912/912S OIL TANK & OPTIONAL COOLER INSTALLATION

S-18 Stinger - 912/912S Oil Tank and Optional Cooler Insallation

Oil Cooler is Optional

#	DESCRIPTION	PART NUMBER	QUANTITY
1 .	Hose Clamp	5-5288	2
2 .	Oil Tank Mount, RH	KPPW0147-R	1
3 .	3/16" Shear Nut	AN364-1032A	2
4 .	Oil Tank Mount, LH	KPPW0147-L	1
5 .	3/16" Thick Washer	AN960-10	2
6 .	3/16" Bolt	AN3-25A	2
7 .	Straight Fitting	KSPW0026	1
8 .	Oil Line - Suction	KSPW0080	3 ft
9 .	Oil Line - Return	KSPW0080	2 ft
10 .	Hose Clamp	5-6203	2
11 .	5/16" Overflow Hose	EGCS-OFH	72 in
12 .	3/16" Bolt *	AN3-4A	8
13 .	Loctite Blue	LOC-TITE	0
14 .	3/16" Thin Washer *	AN960-10L	8
15 .	Oil Cooler Mount Bracket, LH *	KPPW0241-L	1
16 .	Upper Bracket Mount - Oil Cooler *	KPPW0071	1
17 .	.093 Silicone Sheet *	KPPW0254	2
18 .	Threaded Bushing-Oil Cooler *	KPPW0192	4
19 .	Small Oil Cooler *	20708	1
20 .	Lower Bracket Mount - Oil Cooler *	KPPW0072	1
21 .	90 degree Fitting	KSPW0002	2
22 .	Straight Fitting *	KSPW0026	1
23 .	90 Degree Fitting *	KSPW0002	1
24 .	Banjo Fitting	KSPW0083	1
25 .	Banjo Bolt - M16 x 1.5 x 28	940-878	1
26 .	Gasket Ring - 16 x 22	430-622	2
27 .	Safety Wire	-----	0
28 .	90 Degree Fitting - Long	KSPW0082	1
29 .	Oil Cooler Mount Bracket, RH *	KPPW0241-R	1

*Optonal.

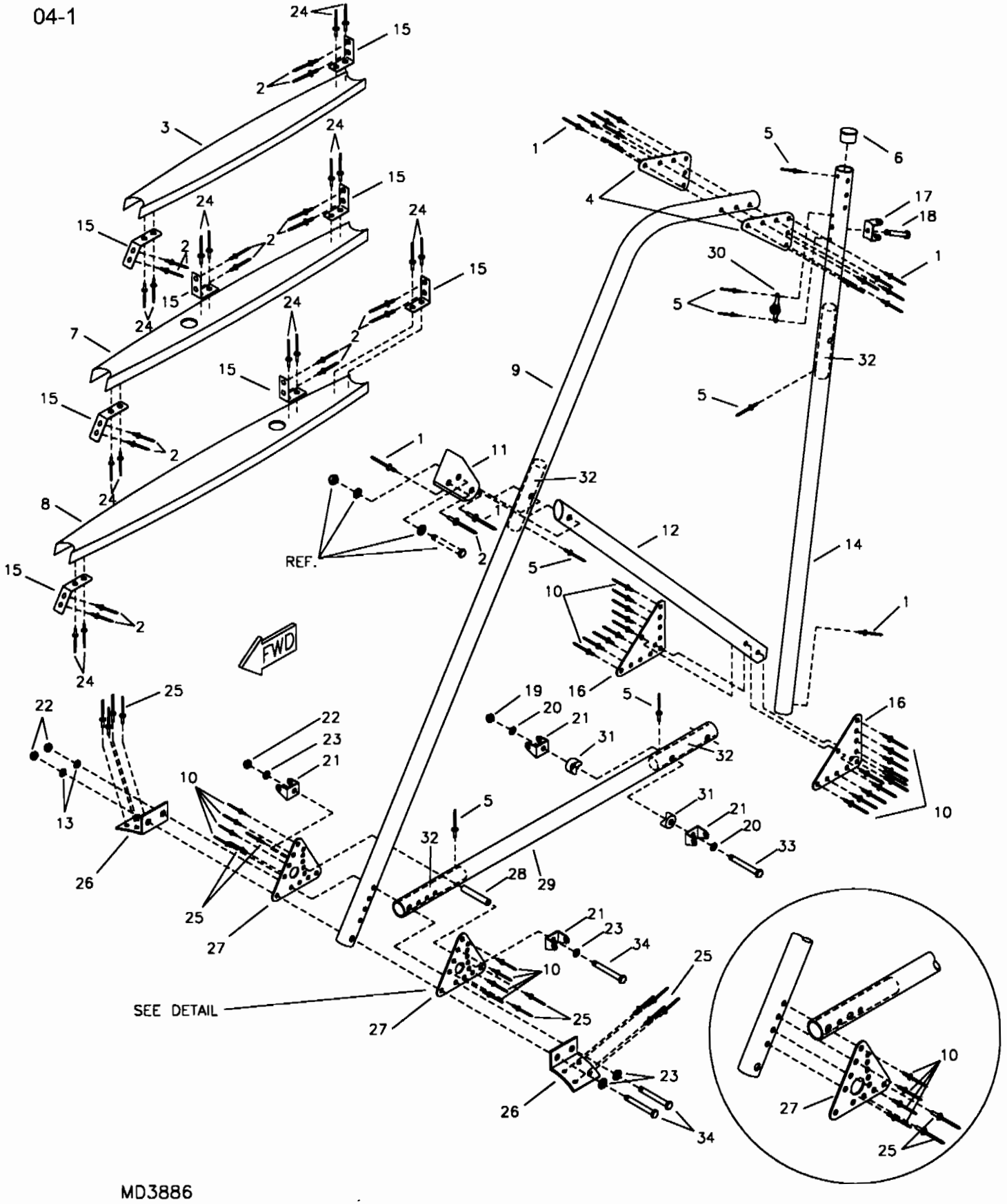

MD3886

RANS S-18 STINGER II
VERTICAL STABILIZER FRAME ASSEMBLY

3/1/01

S-18 Stinger - Vertical Stabilizer Frame Assembly

#	DESCRIPTION	PART NUMBER	QUANTITY
1.	1/8" Stainless Steel Pop Rivet - Cherry Q	CCPQ-42	16
2.	1/8" Aluminum Pop Rivet - Cherry Q	AAPQ-42	18
3.	Vertical Stabilizer - Top Rib	KPVS0035	1
4.	Gusset	KPAC0044	2
5.	3/32" Aluminum Pop Rivet	40APR1/8	6
6.	1" End Cap	1 CAP	1
7.	Vertical Stabilizer - Middle Rib	KPVS0040	1
8.	Vertical Stabilizer - Bottom Rib	KPVS0039	1
9.	Vertical Stabilizer - Leading Edge	KPVS0042	1
10.	1/8" Stainless Steel Pop Rivet - Cherry Q	CCPQ-44	26
11.	U-Bracket	KPAC0055	1
12.	Aluminum Brace, 1" x .049 x X *	KAAC0038-3	0
13.	3/16" Thick Washer	AN960-10	2
14.	Vertical Stabilizer - Trailing Edge	KPVS0043	1
15.	Attach Tang	U-ST001	8
16.	Gusset	KPAC0149	2
17.	Hinge Bracket	W-HB	1
18.	3/16" Bolt	AN3-13A	1
19.	1/4" Shear Nut	AN364-428A	1
20.	1/4" Thin Washer	AN960-416L	2
21.	U Bracket	KPAC0036	4
22.	3/16" Shear Nut	AN364-1032A	3
23.	3/16" Thin Washer	AN960-10L	4
24.	1/8" Aluminum Pop Rivet - Cherry Q	AAPQ-41	16
25.	3/16" Stainless Steel Pop Rivet - Cherry Q	CCPQ-64	12
26.	Horizontal Stabilizer - Boom Bracket	KPHS0035	2
27.	Horizontal Stabilizer - Adjust Bracket	KPHS0010	2
28.	Aluminum Bushing, 1/4" x .028 x 1 3/16" *	KAAC0038-5	0
29.	Vertical Stabilizer - Spreader Tube	KPVS0038	1
30.	3/16" Nut Plate	K-1000-3	1
31.	1" Saddle	1-NS	2
32.	Aluminum Doubler, 7/8" x .058 x 6" *	KAAC0038-1	0
33.	1/4" Bolt	AN4-17A	1
34.	3/16" Bolt	AN3-16A	3

*Builder must fabricate from Raw Stock.

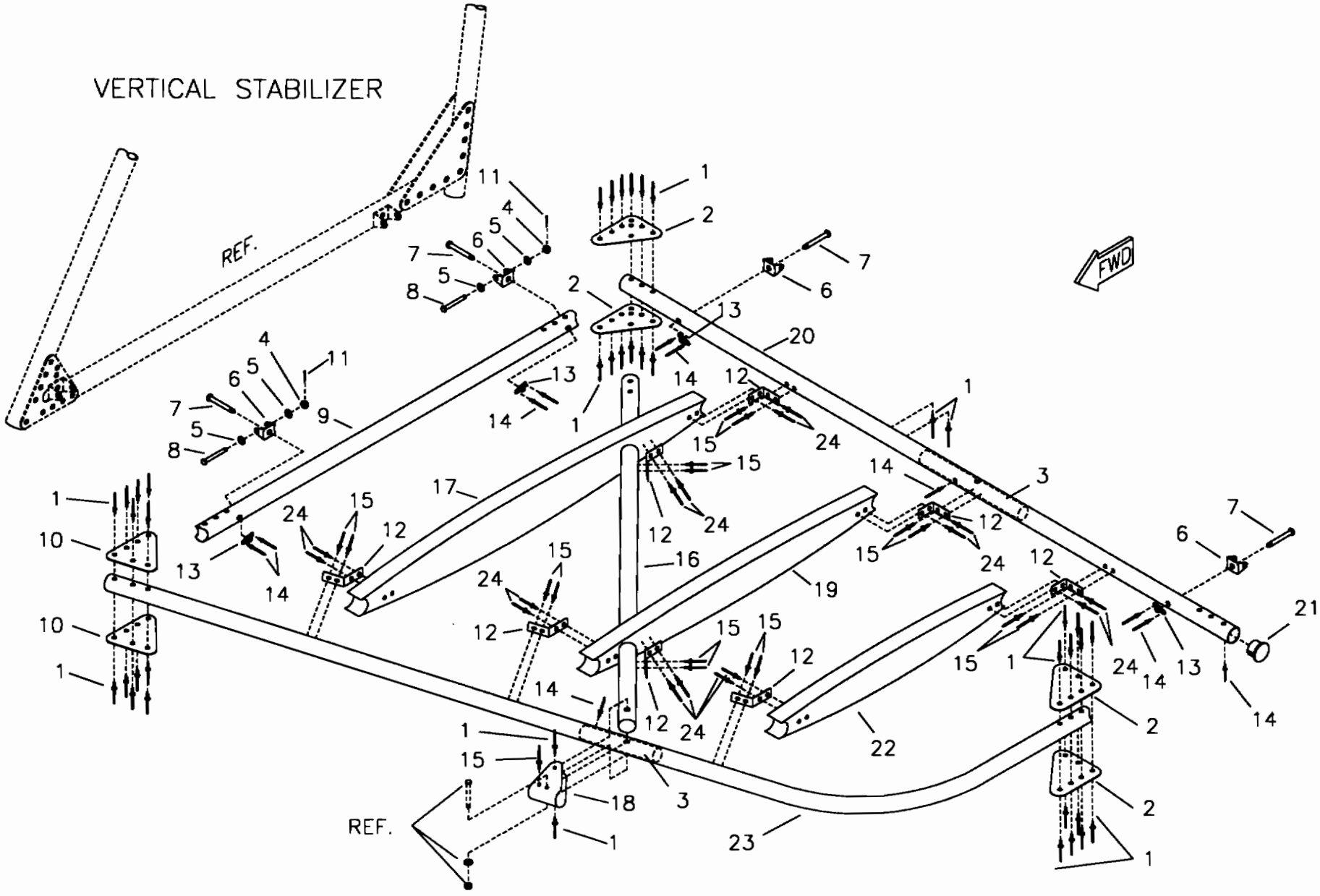

RANS S-18 STINGER II
HORIZONTAL STABILIZER ASSEMBLY

S-18 Stinger - Horizontal Stabilizer Frame Assembly

#	DESCRIPTION	PART NUMBER	QUANTITY
1.	1/8" Stainless Steel Pop Rivet - Cherry Q	CCPQ-42	80
2.	Gusset	KPAC0044	8
3.	Aluminum Doubler, 7/8" x .058 x 6" and 10" *	KAAC0038-1	0
4.	3/16" Castle Nut	AN310-3	4
5.	3/16" Thin Washer	AN960-10L	8
6.	Stainless Steel Hinge	W-HB	8
7.	3/16" Bolt	AN3-13A	8
8.	3/16" Bolt	AN3-15	4
9.	Horizontal Stabilizer Spreader Tube, LH	KPHS0031-LH	1
9.	Horizontal Stabilizer Spreader Tube, RH	KPHS0031-RH	1
10.	Gusset	KPAC0045	4
11.	Small Cotter Pin	MS24665-134	4
12.	Attach Tang	U-ST001	16
13.	3/16" Nut Plate	K-1000-3	8
14.	3/32" Aluminum Pop Rivet	40APR1/8	22
15.	1/8" Aluminum Pop Rivet - Cherry Q	AAPQ-42	36
16.	Aluminum Brace, 1" x .049 x X *	KAAC0038-3	0
17.	Horizontal Stabilizer - Inboard Rib	KPHS0028	2
18.	U Bracket	KPAC0055	2
19.	Horizontal Stabilizer - Middle Rib	KPHS0029	2
20.	Horizontal Stabilizer - Trailing Edge	KPHS0032	2
21.	1" End Cap	1 CAP	2
22.	Vertical Stabilizer - Top Rib	KPVS0035	2
23.	Horizontal Stabilizer - Leading Edge	KPHS0033	2
24.	1/8" Aluminum Pop Rivet - Cherry Q	AAPQ-41	32

*Builder must fabricate from Raw Stock.

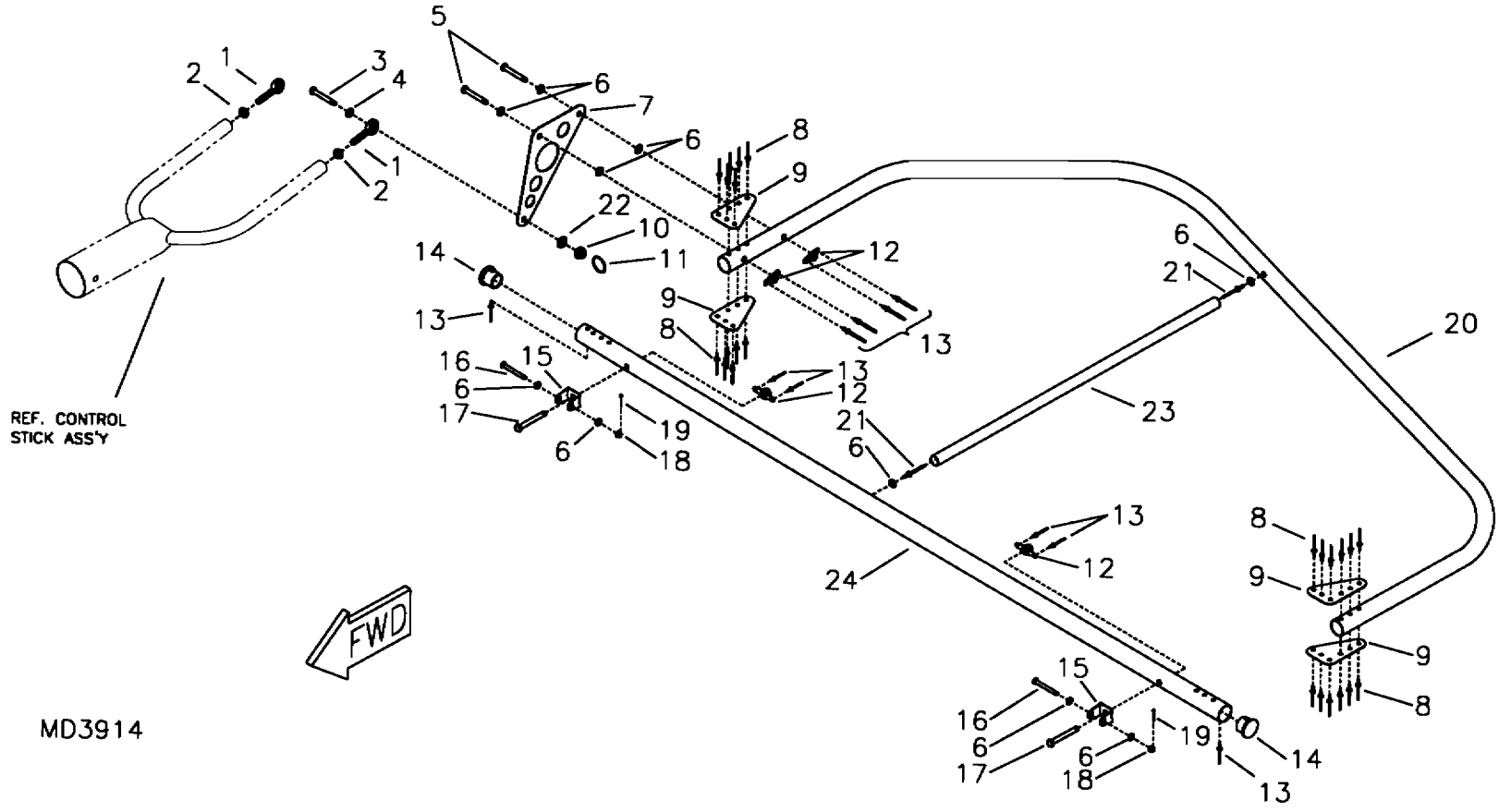

RAMS S-18 STINGER II ELEVATOR FRAME ASSEMBLY

S-18 Stinger - Elevator Frame Assembly

#	DESCRIPTION	PART NUMBER	QUANTITY
1.	Male Rod End, 1/4" X 1/4"	NM-4	2
2.	1/4" Plain Nut	AN345-416	2
3.	1/4" Bolt	AN4-10	2
4.	1/4" Plastic Washer	PW-4	2
5.	3/16" Bolt	AN3-14A	4
6.	3/16" Thick Washer	AN960-10	20
7.	Elevator Horn	KPEL0028	2
8.	1/8" Stainless Steel Pop Rivet - Cherry Q	CCPQ-42	48
9.	Gusset	KPAC0044	8
10.	1/4" Castle Nut	AN310-4	2
11.	Loc Ring	RL 27 5/16	2
12.	3/16" Nut Plate	K-1000-3	8
13.	3/32" Aluminum Pop Rivet	40APR1/8	20
14.	1" End Cap	1 CAP	4
15.	Stainless Steel Hinge	W-HB	4
16.	3/16" Bolt	AN3-15	4
17.	3/16" Bolt	AN3-13A	4
18.	3/16" Castle Nut	AN310-3	4
19.	Small Cotter Pin	MS24665-134	4
20.	Elevator-Trailing Edge	KPEL0013	2
21.	3/16" Aluminum Pop Rivet - Cherry Q	AAPQ-62	4
22.	1/4" Thin Washer	AN960-416L	2
23.	Internal Brace, 1/2" x .035 x X *	KAAC0038-6	0
24.	Elevator-Leading Edge	KPEL0012	2

*Builder must fabricate from Raw Stock.

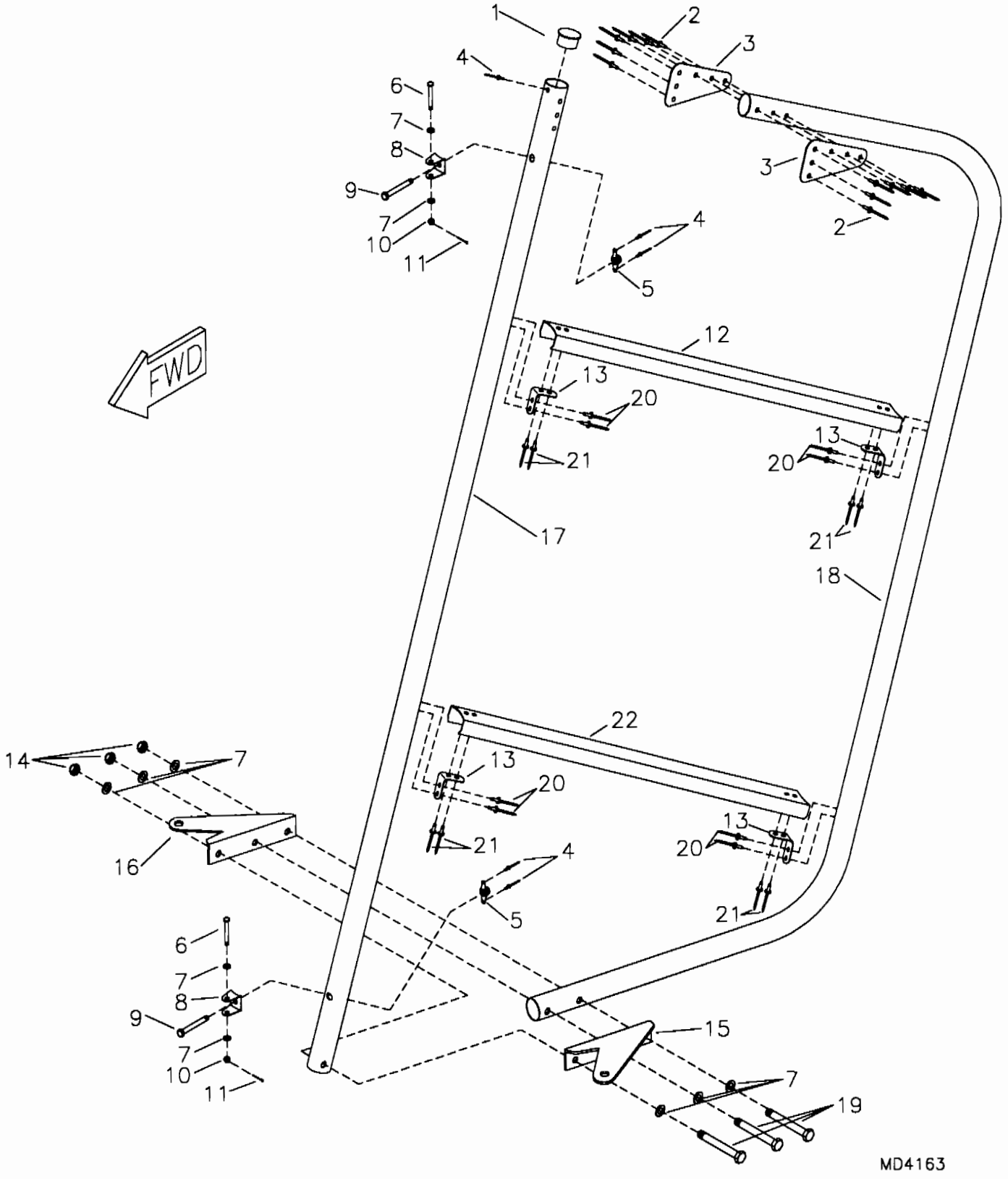

RANS S-18 STINGER II
RUDDER FRAME ASSEMBLY

S-18 Stinger - Rudder Frame Assembly

#	DESCRIPTION	PART NUMBER	QUANTITY
1.	1" End Cap	1 CAP	1
2.	1/8" Stainless Steel Pop Rivet - Cherry Q	CCPQ-42	12
3.	Gusset	KPAC0044	2
4.	3/32" Aluminum Pop Rivet	40APR1/8	5
5.	3/16" Nut Plate	K-1000-3	2
6.	3/16" Bolt	AN3-15	2
7.	3/16" Thick Washer	AN960-10	14
8.	Stainless Steel Hinge	W-HB	2
9.	3/16" Bolt	AN3-13A	2
10.	3/16" Castle Nut	AN310-3	2
11.	Small Cotter Pin	MS24665-134	2
12.	Rudder Rib - Upper	KPRD0061	1
13.	Attach Tang	U-ST001	4
14.	3/16" Shear Nut	AN364-1032A	3
15.	Rudder Horn, LH	TG-RHL	1
16.	Rudder Horn, RH	TG-RHR	1
17.	Rudder-Leading Edge	KPRD0016	1
18.	Rudder-Trailing Edge	KPRD0017	1
19.	3/16" Bolt	AN3-15A	3
20.	1/8" Aluminum Pop Rivet - Cherry Q	AAPQ-42	16
21.	1/8" Aluminum Pop Rivet - Cherry Q	AAPQ-41	8
22.	Rudder Rib - Lower	KPRD0062	1

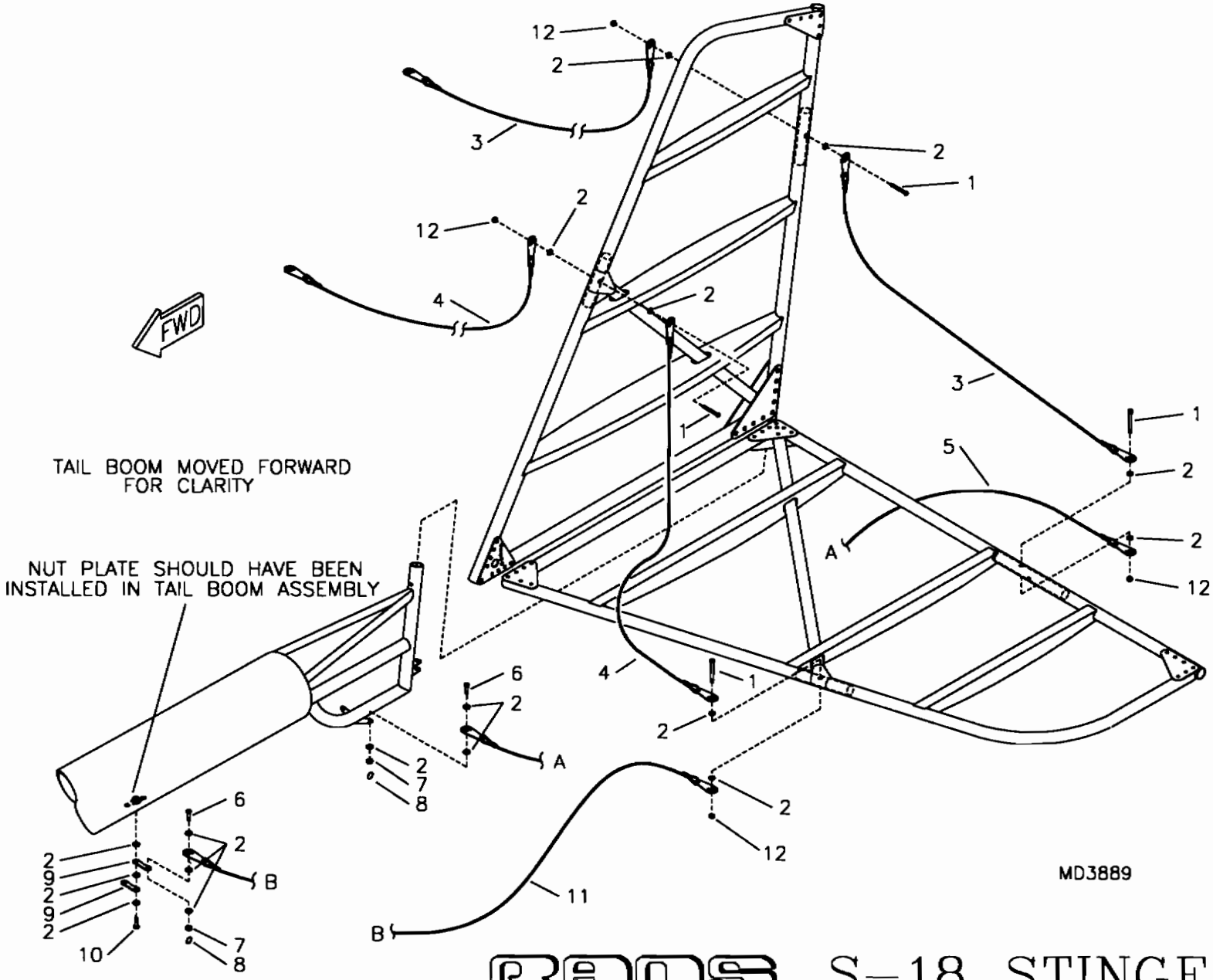

RANS S-18 STINGER II
TAIL CABLE ASSEMBLY

S-18 Stinger - Tail Group Cable Assembly

#	DESCRIPTION	PART NUMBER	QUANTITY
1.	3/16" Bolt	AN3-15A	6
2.	3/16" Thick Washer	AN960-10	25
3.	Top AFT Cable	KAHS0011	2
4.	Top FWD Cable (4, 5, 6)	KAHS0013	2
5.	Lower AFT Cable	KAHS0014	2
6.	3/16" Bolt	AN3-5	4
7.	3/16" Castle Nut	AN310-3	4
8.	Loc Ring	RL 27 1/4	4
9.	Tang	KPAC0038	2
10.	3/16" Bolt	AN3-6A	1
11.	Lower FWD Cable	KAHS0038	2
12.	3/16" Tensile Nut	AN365-1032A	6

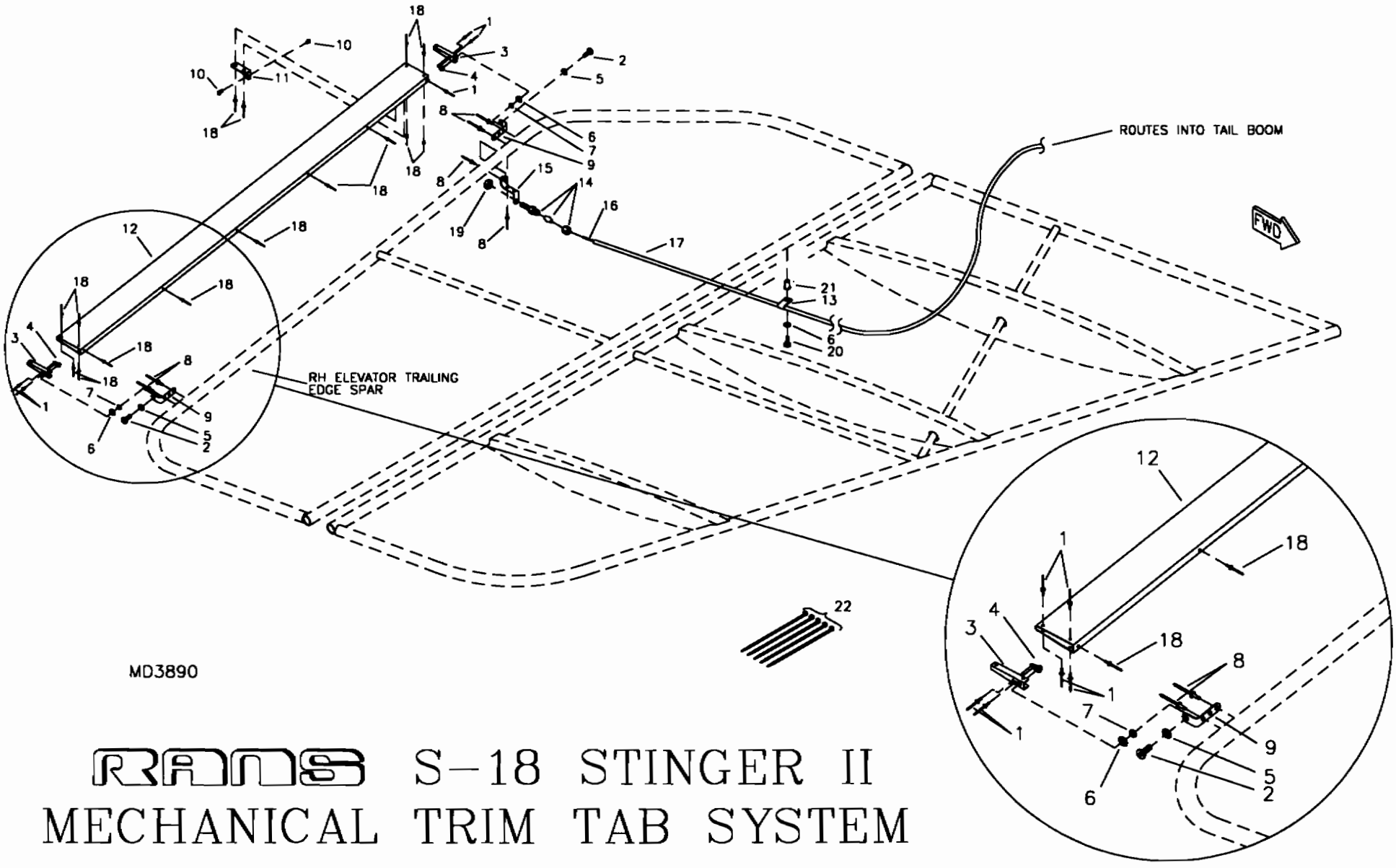

RANS S-18 STINGER II
MECHANICAL TRIM TAB SYSTEM

S-18 Stinger - Mechanical Trim System

#	DESCRIPTION	PART NUMBER	QUANTITY
1.	3/32" Aluminum Pop Rivet	40APR1/8	5
2.	3/16" Truss Head Bolt	AN526-C1032R12	2
3.	Trim Tab End Rib	KPTR0007	2
4.	3/16" Single Ear Nut Plate	MS21051-L3	2
5.	3/16" Thin Washer	AN960-10L	2
6.	3/16" Thick Washer	AN960-10	3
7.	Aluminum Bushing, 1/4" x .028 x 1/16" *	KAAC0038-5	0
8.	3/16" Aluminum Pop Rivet - Cherry Q	AAPQ-62	6
9.	Trim Tab Hinge	ST-16-BENT	2
10.	Wire Swivel/Screw Stop	2361	1
11.	Trim Tab Horn	KPTR0008	1
12.	Trim Tab	KPTR0009	1
13.	Cushioned Tube Clamp	MS21919WDG3	1
14.	Conduit Adjuster Assembly	KSFS0014	1
15.	Cable Housing Stop Bracket	KPTR0005	1
16.	Trim Push Wire	TR-PW	21 ft
17.	Trim Cable Housing	KSAC0008	20 ft
18.	1/8" Aluminum Pop Rivet - Cherry Q	AAPQ-41	15
19.	1/4" Plain Nut	AN364-428A	1
20.	3/16" Bolt	AN3-3A	1
21.	3/16" Rivet Nut	MS27130-A25K	1
22.	Zip Ties	ZIP TIES	5

*Builder must fabricate from Raw Stock.

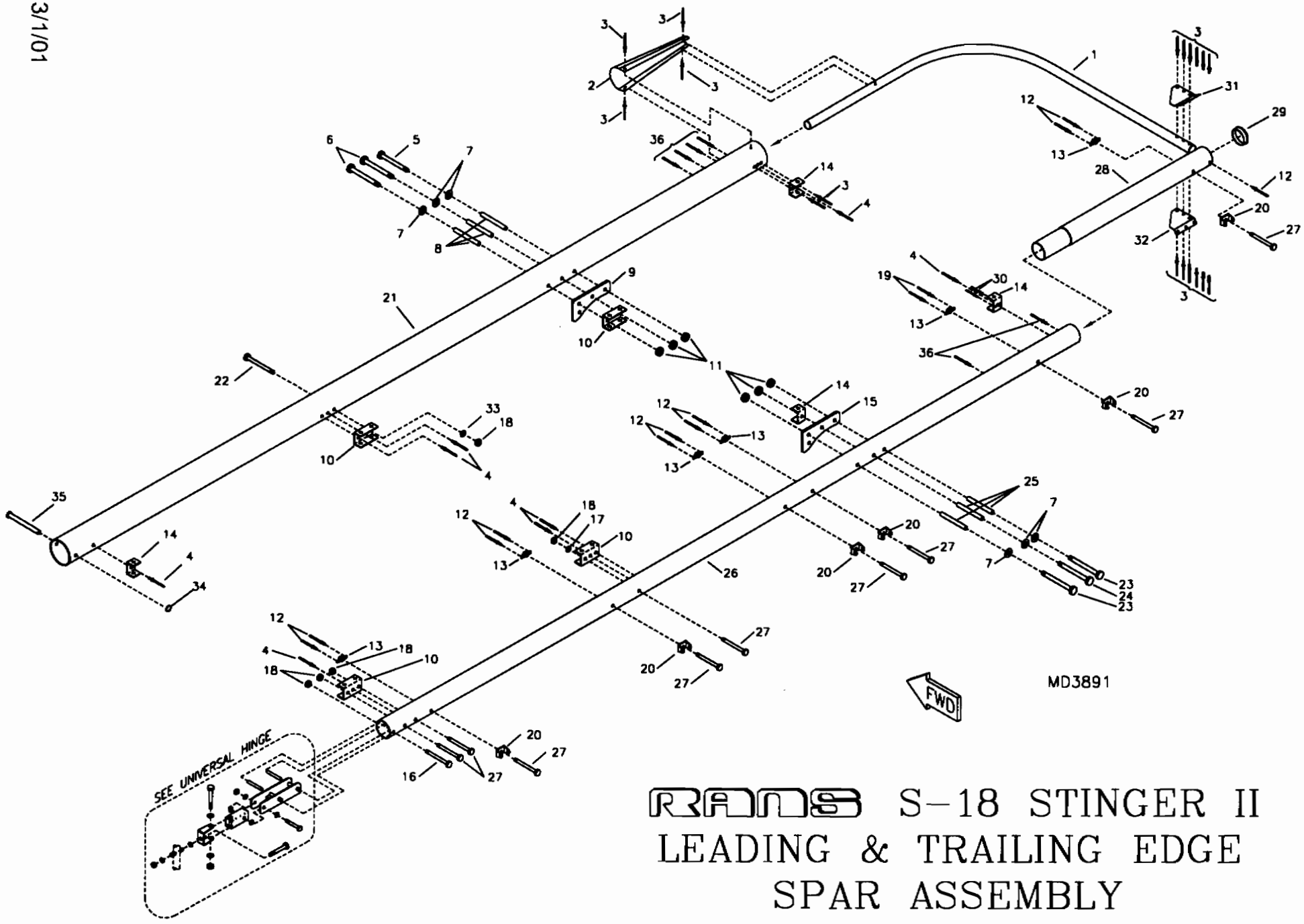

RANS S-18 STINGER II
LEADING & TRAILING EDGE SPAR ASSEMBLY

S-18 Stinger - Leading & Trailing Edge Spar Assembly

#	DESCRIPTION	PART NUMBER	QUANTITY
1 .	Tip Bow	W-TIP(12)	2
2 .	Tip Wrap	W-TW-F	2
3 .	1/8" Stainless Steel Pop Rivet - Cherry Q	CCPQ-42	36
4 .	3/16" Stainless Steel Pop Rivet - Cherry Q	CCPQ-64	16
5 .	1/4" Bolt *	AN4-35ALP	2
6 .	1/4" Bolt *	AN4-36ALP	4
7 .	1/4" Thin Washer	AN960-416L	12
8 .	Spacer Bushing, 3/8" x .058 x 3"	SB-3/8X3	6
9 .	FWD Strut Plate	W-SAP-LE	2
10 .	Long Wing Channel	W-WCL	8
11 .	1/4" Shear Nut	AN364-428A	12
12 .	3/32" Aluminum Pop Rivet	40APR1/8	22
13 .	3/16" Nut Plate	K-1000-3	12
14 .	Horizontal Stabilizer Attach Bracket	S2-SAB	8
15 .	AFT Strut Plate	W-SAP-TE	2
16 .	3/16" Bolt	AN3-22A	2
17 .	3/16" Thin Washer	AN960-10L	2
18 .	3/16" Tensile Nut	AN365-1032A	10
19 .	3/32" Aluminum Pop Rivet	40APR1/4	4
20 .	Stainless Steel Hinge	W-HB	12
21 .	Leading Edge Spar	W-LES	2
22 .	3/16" Bolt *	AN3-34ALP	2
23 .	1/4" Bolt *	AN4-25ALP	4
24 .	1/4" Bolt *	AN4-26ALP	2
25 .	Spacer Bushing, 3/8" x .058 x 2"	SB-3/8X2	6
26 .	Trailing Edge Spar	KPWI0629	2
27 .	3/16" Bolt	AN3-23A	18
28 .	Trailing Edge Spar Tip	KPWI0630	2
29 .	2" End Cap	EC-10	2
30 .	1/8" Stainless Steel Pop Rivet - Cherry Q	CCPQ-45	4
31 .	Tip Gusset Top	W-TG-T	2
32 .	Tip Gusset Bottom	W-TG-B	2
33 .	3/16" Thick Washer	AN960-10	2
34 .	Loc Ring **	RL 27 1/4	0
35 .	3/8" Clevis Pin **	MS20392-5C97	0
36 .	3/16" Stainless Steel Pop Rivet - Cherry Q	CCPQ-62	12

*These bolts have a special thin head painted.
They must be used to allow the wing skins to slide on.
**Referenced from Keel Installation.

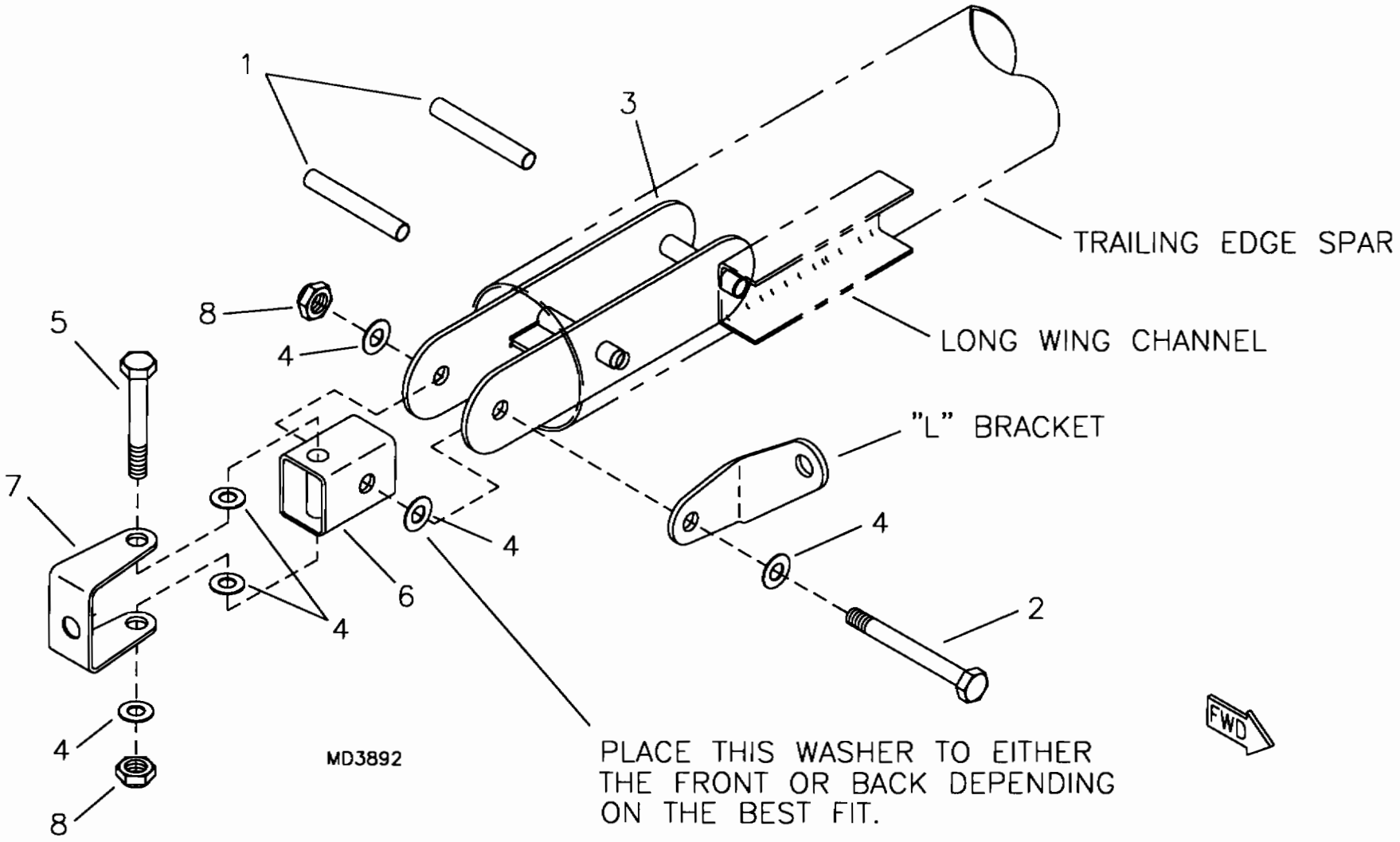

RANS S-18 STINGER II
UNIVERSAL HINGE ASSEMBLY

S-18 Stinger - Universal Hinge Assembly

#	DESCRIPTION	PART NUMBER	QUANTITY
1.	Aluminum Bushing, 1/4" x .028 x 1 7/8" *	KAAC0038-5	0
2.	1/4" Bolt	AN4-17A	2
3.	Trailing Edge Spar Root Fitting	W-TES-RF	2
4.	1/4" Thick Washer	AN960-416	12
5.	1/4" Bolt	AN4-16A	2
6.	Hinge Cube	W-H-CUBE	2
7.	Stainless Steel U Bracket **	SU-118	0
8.	1/4" Shear Nut	AN364-428A	4

*Builder must fabricate from Raw Stock.
**Referenced from Keel Installation.

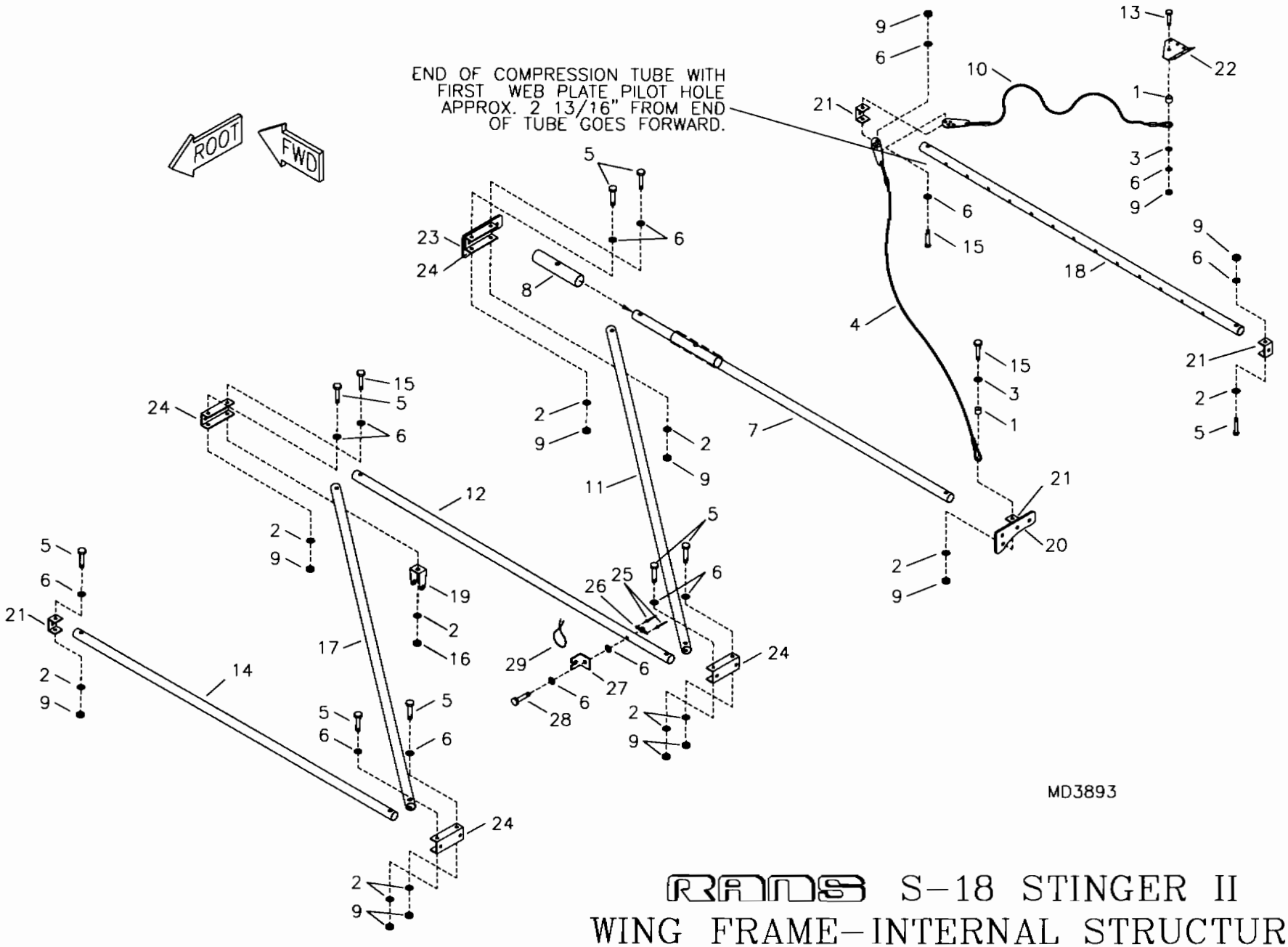

RANS S-18 STINGER II
WING FRAME-INTERNAL STRUCTURE

S-18 Stinger - Internal Structure

#	DESCRIPTION	PART NUMBER	QUANTITY
1.	Aluminum Bushing, 1/4" x .028 x 3/16" *	KAAC0038-5	0
2.	3/16" Thick Washer	AN960-10	22
3.	3/16" Plastic Washer	PW-3	4
4.	Wing Cable, 51"	W-WC-51	2
5.	3/16" Bolt	AN3-15A	18
6.	3/16" Thin Washer	AN960-10L	30
7.	Middle Compression Tube	W-MC-151	2
8.	Compression Tube Doubler	CS-CTD	2
9.	3/16" Shear Nut	AN364-1032A	24
10.	Wing Cable, 61	W-WC-59	2
11.	Drag Brace	W-DB-151	2
12.	Flap Compression Tube	W-FCT-151	2
13.	3/16" Bolt	AN3-4A	2
14.	Inner Compression Tube	W-IO-151	2
15.	3/16" Bolt	AN3-16A	6
16.	3/16" Tensile Nut	AN365-1032A	2
17.	Drag Brace Root	W-DBR-151	2
18.	Outer Compression Tube	KPWI0117	2
19.	Jury Strut Bracket	JS-BK	2
20.	AFT Strut Plate **	W-SAP-TE	0
21.	Attach Bracket **	S2-SAB	0
22.	Tip Gusset Top **	W-TG-T	0
23.	FWD Strut Plate **	W-SAP-LE	0
24.	Long Wing Channel **	W-WCL	0
25.	3/32" Aluminum Pop Rivet	40APR1/8	4
26.	3/16" Nut Plate	K-1000-3	2
27.	Teleflex Retainer	W-TEL-R	2
28.	3/16" Bolt	AN3-14A	2
29.	Safety Wire	SAFETY WIRE	0

*Builder must fabricate from Raw Stock.
**Referenced from leading and trailing edge spar assembly.

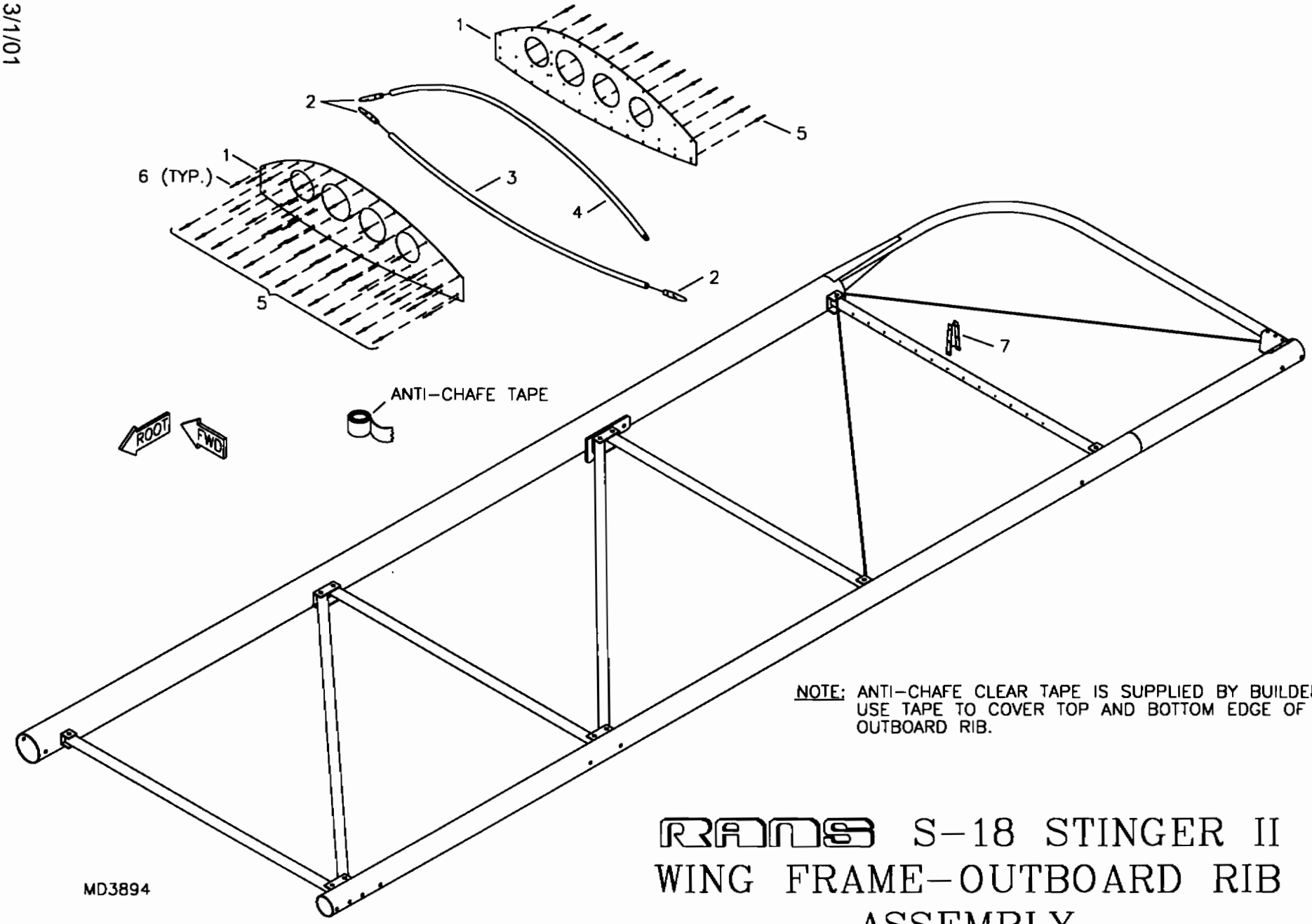

NOTE: ANTI-CHAFE CLEAR TAPE IS SUPPLIED BY BUILDER, USE TAPE TO COVER TOP AND BOTTOM EDGE OF OUTBOARD RIB.

MD3894

RANS S-18 STINGER II WING FRAME-OUTBOARD RIB ASSEMBLY

S-18 Stinger - Wing Frame - Outboard Rib Assembly

#	DESCRIPTION	PART NUMBER	QUANTITY
1.	Outboard Rib - Web Plate, LH	KPWI0096-LH	2
1.	Outboard Rib - Web Plate, RH	KPWI0096-RH	2
2.	Rib Tip	RIB-TIP	6
3.	Outboard Rib - Bottom Tube	KPWI0145	2
4.	Outboard Rib - Top Tube	KPWI0095	2
5.	1/8" Aluminum Pop Rivet - Cherry Q	AAPQ-42	36
6.	1/8" Aluminum Pop Rivet - Cherry Q	AAPQ-41	80
7.	Outboard Rib - Web Cap	KPWI0118	2

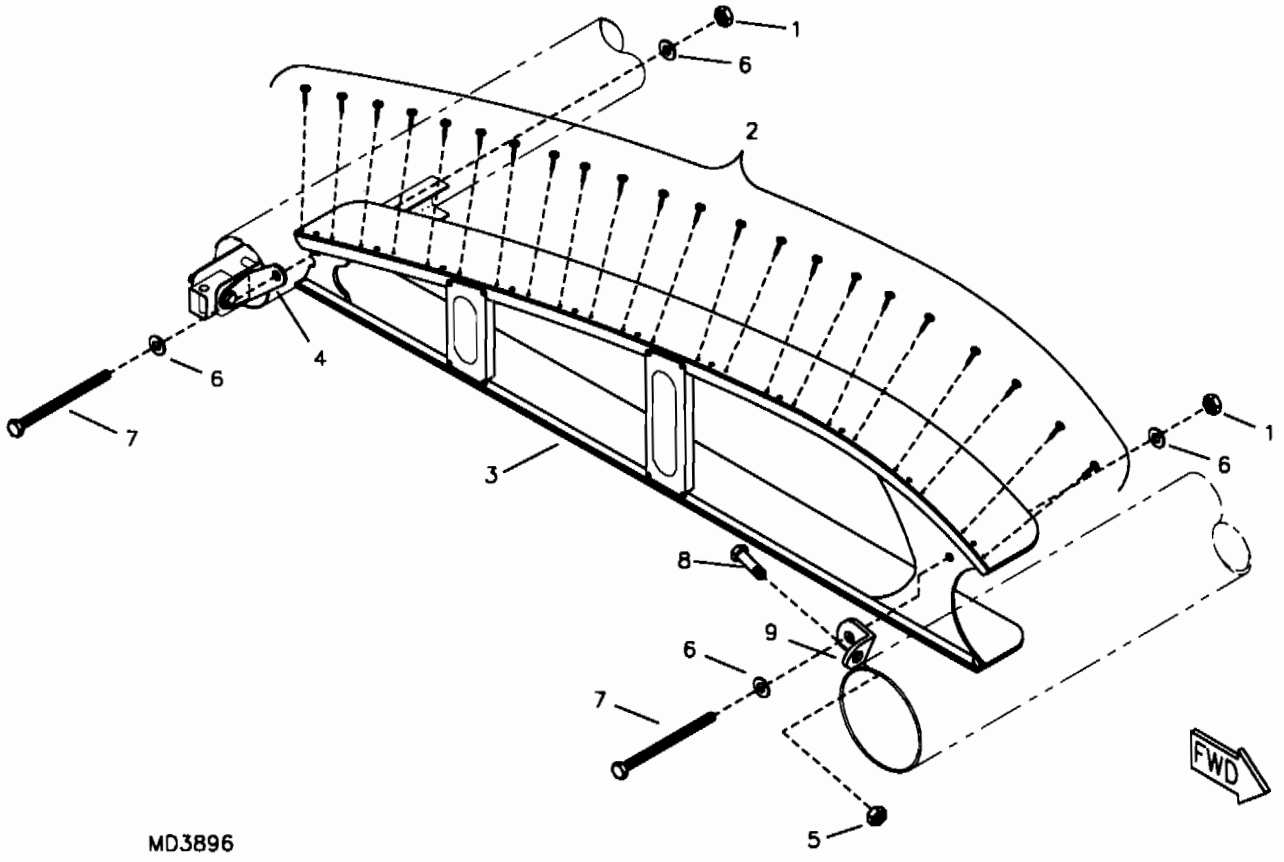

RANS S-18 STINGER II
ROOT RIB ASSEMBLY

S-18 Stinger - Root Rib Tensioning System

#	DESCRIPTION	PART NUMBER	QUANTITY
1.	1/4" Tensile Nut	AN365-428A	4
2.	#8 Pan Head Screw	8X1/2 PHS	102
3.	Root Rib, LH	KAWI0011-L	1
3.	Root Rib, RH	KAWI0011-R	1
4.	"L" Bracket	KPWI0169-L	1
4.	"L" Bracket	KPWI0169-R	1
5.	3/16" Shear Nut	AN364-1032A	2
6.	1/4" Thin Washer	AN960-416L	8
7.	1/4" Bolt *	KSHW0049	4
8.	3/16" Bolt	AN3-5A	2
9.	"L" Bracket	KPWI0170	2

*This bolt is nearly threaded it's whole length.

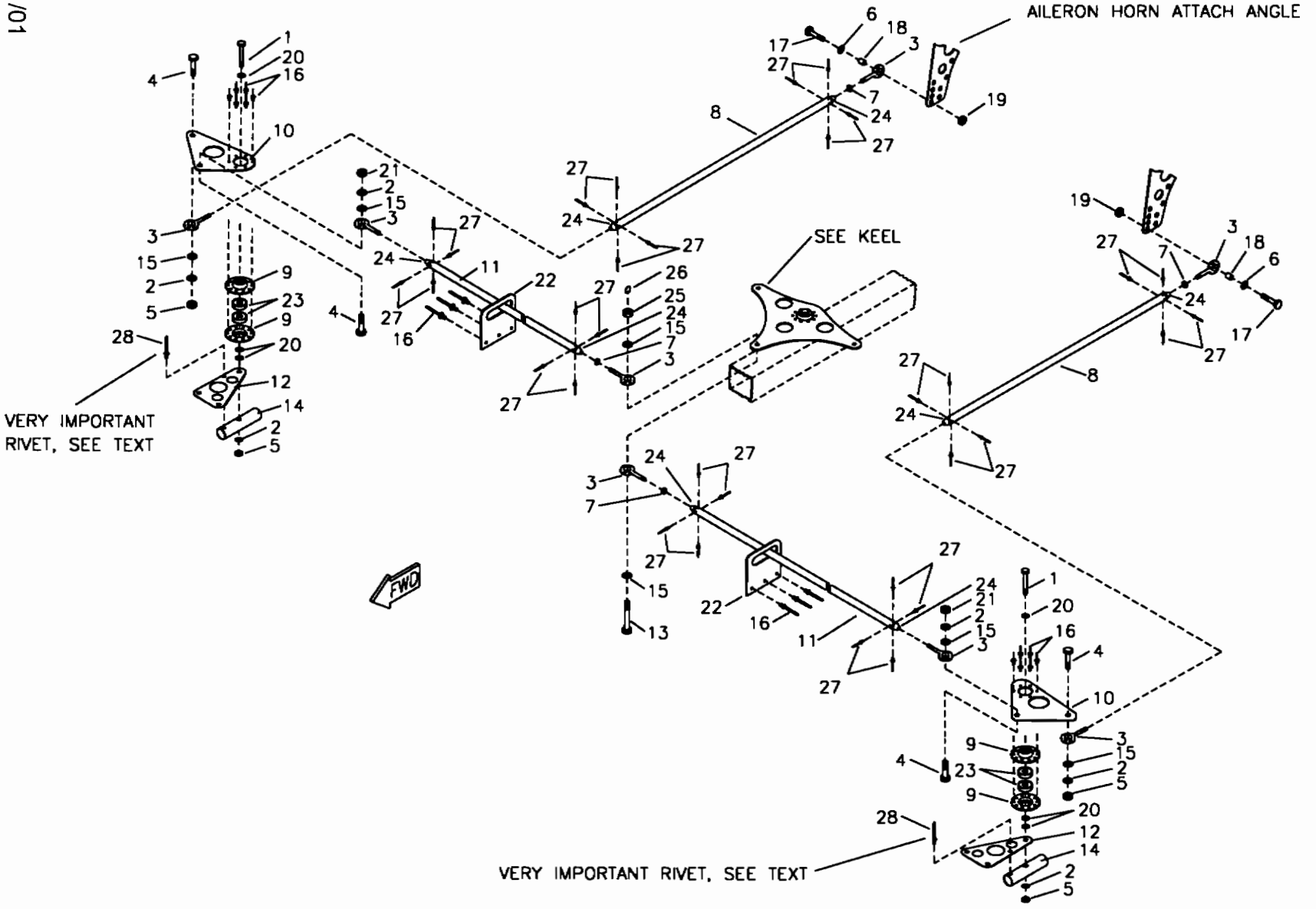

RANS S-18 STINGER II
AILERON PUSH PULL TUBE SYSTEM

S-18 Stinger - Aileron Push-Pull Tube System

#	DESCRIPTION	PART NUMBER	QUANTITY
1.	1/4" Bolt	AN4-22A	2
2.	1/4" Thin Washer	AN960-416L	6
3.	Male Rod End, 1/4" X 1/4"	NM-4	8
4.	1/4" Bolt	AN4-7A	4
5.	1/4" Shear Nut	AN364-428A	4
6.	3/16" Plastic Washer	PW-3	2
7.	1/4" Plain Nut	AN345-416	4
8.	Aileron Push Pull Tube, 42 1/8"	CS-42PPT	2
9.	Bearing Flange	BR-FLNG	4
10.	Bell Crank	AIL-2/1BC	2
11.	Aileron Push Pull Tube, 109"	CS-109PPT	2
12.	Bell Crank Gusset, RH	CS-BELGU-RH	1
12.	Bell Crank Gusset, LH	CS-BELGU-LH	1
13.	1/4" Bolt	AN4-13	1
14.	Compression Tube Doubler *	CS-CTD	0
15.	1/4" Plastic Washer	PW-4	6
16.	1/8" Aluminum Pop Rivet - Cherry Q	AAPQ-44	18
17.	3/16" Bolt	AN3-7A	2
18.	Aluminum Bushing, 1/4" x .028 x 3/8" **	KAAC0038-5	0
19.	3/16" Shear Acorn Nut	22NKM02	2
20.	1/4" Thick Washer	AN960-416	6
21.	1/4" Shear Nut	AN364-428A	2
22.	Push Pull Tube Guide	KPCS0150	2
23.	Bearing	SR4APP	4
24.	Push Pull Tube End Fitting	CS-3/4PTEF	8
25.	1/4" Castle Nut	AN310-4	1
26.	Loc Ring	RL 27 1/4	1
27.	1/8" Stainless Steel Pop Rivet - Cherry Q	CCPQ-42	32
28.	1/8" Stainless Steel Pop Rivet - Cherry Q	CCPQ-44	2

*Referenced from internal structure.
**Builder must fabricate from raw stock.

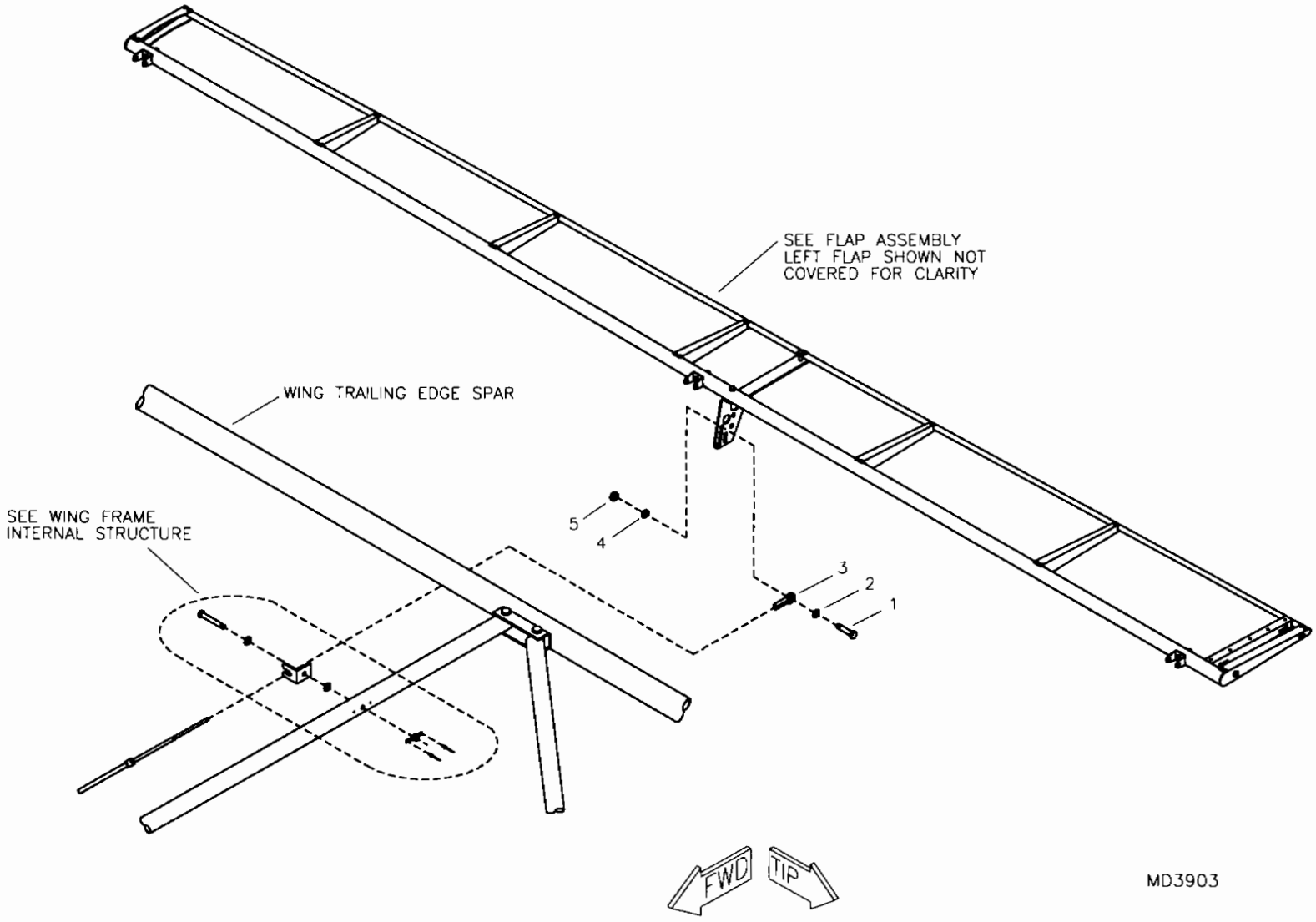

RANS S-18 STINGER II
FLAP SYSTEM-IN FLIGHT ADJUSTABLE

S-18 Stinger - Flap System
In-Flight Adjustable

#	DESCRIPTION	PART NUMBER	QUANTITY
1.	3/16" Bolt	AN3-7A	2
2.	3/16" Plastic Washer	PW-3	2
3.	Female Rod End	NF-3	2
4.	3/16" Thin Washer	AN960-10L	2
5.	3/16" Shear Acorn Nut	22NKM02	2

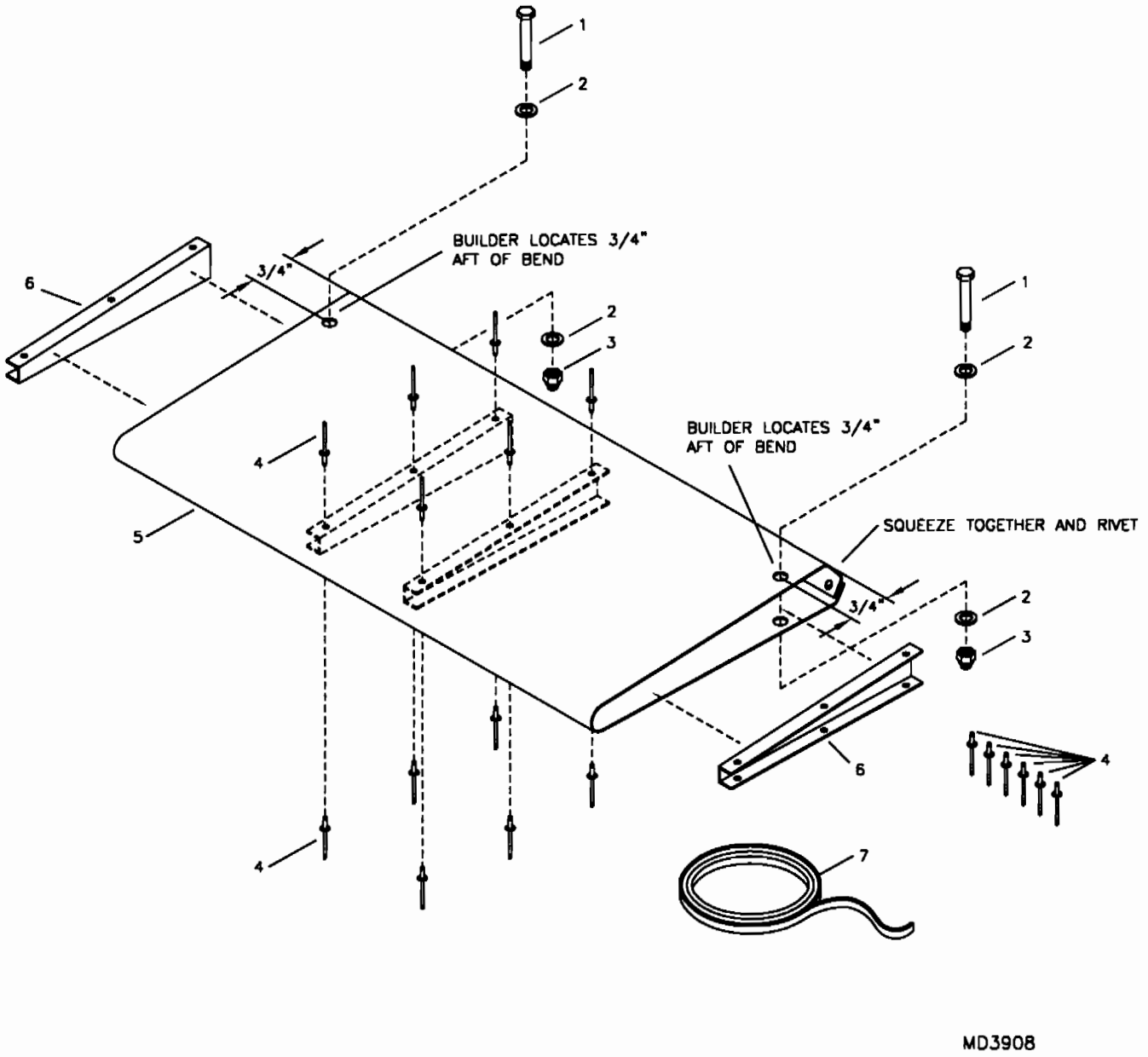

RANS S-18 STINGER II
FLAP FILLET ASSEMBLY

S-18 Stinger - Flap Fillet Assembly

#	DESCRIPTION	PART NUMBER	QUANTITY
1.	3/16" Bolt	AN3-15A	2
2.	3/16" Thin Washer	AN960-10L	4
3.	3/16" Shear Acorn Nut	22NKM02	2
4.	1/8" Aluminum Pop Rivet - Cherry Q	AAPQ-41	16
5.	Flap Fillet-Outer Wrap	KPFL0028	1
6.	Flap Fillet-Rib	KPFL0029	2
7.	Small Rubber Edging	8510K11	36 in

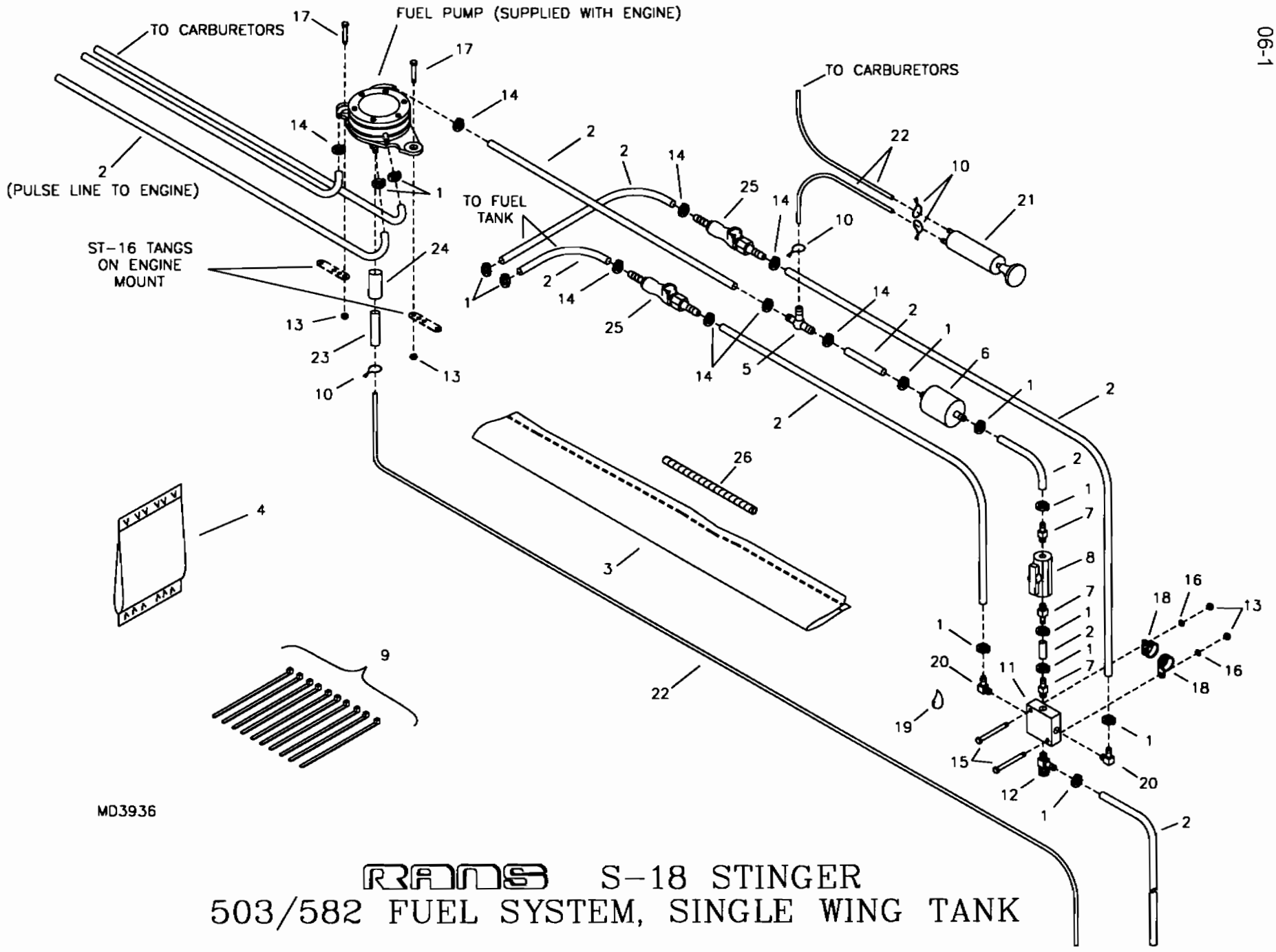

RANS S-18 STINGER
503/582 FUEL SYSTEM, SINGLE WING TANK

S-18 Stinger - 503/582 Fuel System - Single Wing Tank

#	DESCRIPTION	PART NUMBER	QUANTITY
1.	Line Clamp, 3/8"	FS-LCL 3/8	12
2.	1/4" Blue Fuel Line	FS-FL	25 ft
3.	Wire & Fuel Line Cover	KPCV0032	1
4.	Primer Pump Kit **	SINGLE PRIMER(6)	0
5.	Primer Fuel Line T *	PRIME-LINE-T	0
6.	Fuel Filter	FS-FIL	1
7.	Straight Withdrawal Fitting	8330	3
8.	Fuel Shut Off Valve	FS-S-OFF	1
9.	Zip Ties	ZIP TIES	10
10.	Safety Wire	SAFETY WIRE	0
11.	Fuel Mixer Block	FS-FMB	1
12.	Sump Drain Valve	8336	1
13.	3/16" Shear Nut	AN364-1032A	4
14.	Line Clamp, 5/16" I.D.	FS-LCL 5/16ID	8
15.	3/16" Bolt	AN3-11A	2
16.	3/16" Thick Washer	AN960-10	2
17.	3/16" Bolt	AN3-7A	2
18.	3/4" Cushioned Tube Clamp	MS21919-DG12	2
19.	Loctite Blue	LOC-TITE	0
20.	90 Withdrawal Fitting	8342	2
21.	Primer Pump *	PRIME-PUMP	0
22.	1/8" Primer Line	PRIMER LINE	6 ft
23.	5/16" Overflow Hose	EGCS-OFH	1 ft
24.	Shrink Wrap	KSAC0006	5 in
25.	1/4" Fuel Line Quick Disconnect,Male & Female Pair	1/4 QUICK DISCONNECT	2
26.	Coil Wrap	1/2 SPIRAL LOOM	2 ft

*Supplied with Primer Kit.
**Referenced.

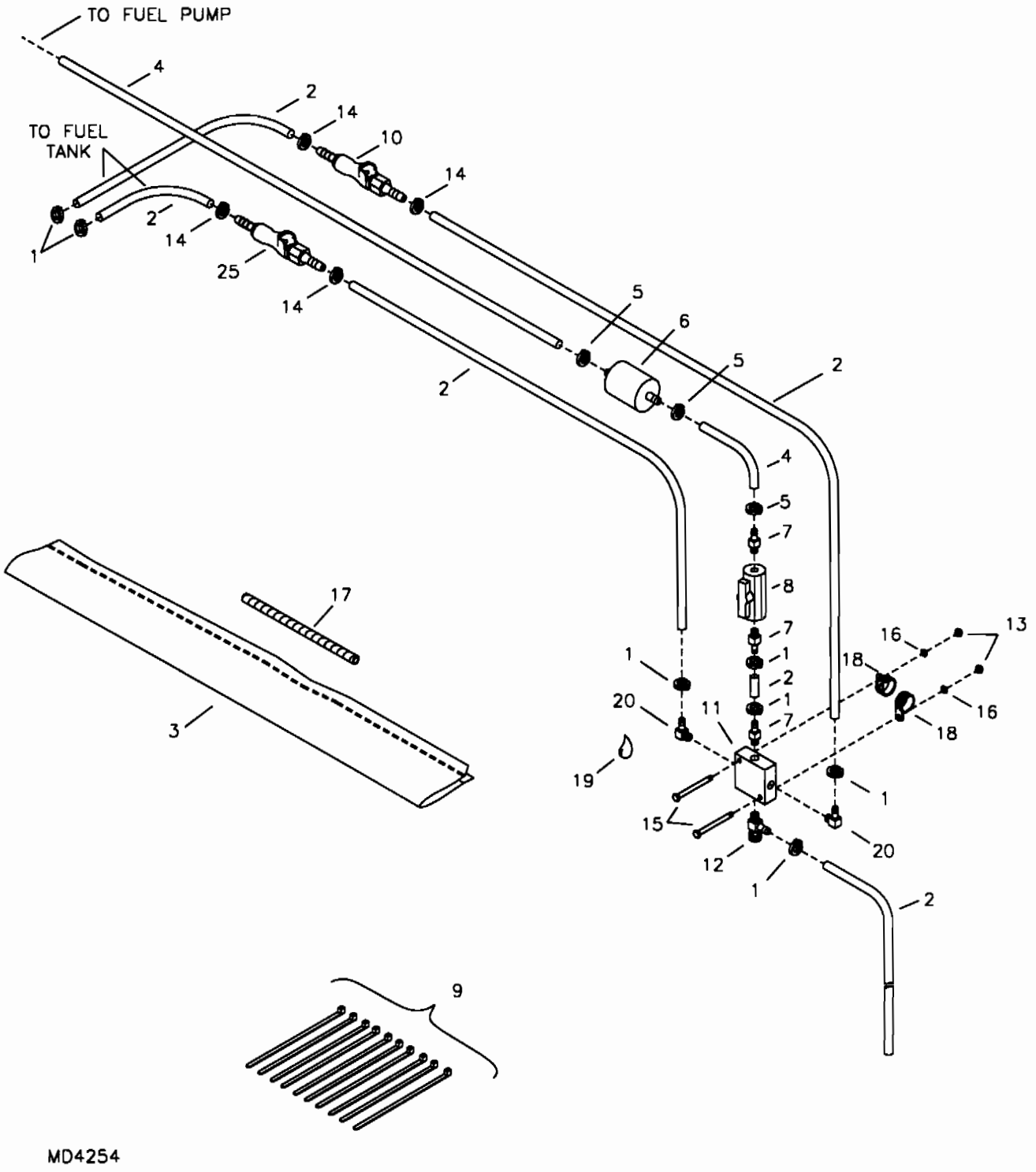

RANS S-18 STINGER
912 FUEL SYSTEM, SINGLE WING TANK

S-18 Stinger - 912 Fuel System - Single Wing Tank

#	DESCRIPTION	PART NUMBER	QUANTITY
1.	Line Clamp, 3/8"	FS-LCL 3/8	7
2.	1/4" Blue Fuel Line	FS-FL	15 ft
3.	Wire & Fuel Line Cover	KPCV0032	1
4.	1/4" Black Fuel Line *	27002A	0 ft
5.	Small Hose Clamp	5-6202	3
6.	Fuel Filter	FS-FIL	1
7.	Straight Withdrawal Fitting	8330	3
8.	Fuel Shut Off Valve	FS-S-OFF	1
9.	Zip Ties	ZIP TIES	10
10.	1/4" Fuel Line Quick Disconnect,Male & Female Pair	1/4 QUICK DISCONNECT	2
11.	Fuel Mixer Block	FS-FMB	1
12.	Sump Drain Valve	8336	1
13.	3/16" Shear Nut	AN364-1032A	2
14.	Line Clamp, 5/16" I.D.	FS-LCL 5/16ID	4
15.	3/16" Bolt	AN3-11A	2
16.	3/16" Thick Washer	AN960-10	2
17.	Coil Wrap	1/2 SPIRAL LOOM	2 ft
18.	3/4" Cushioned Tube Clamp	MS21919-DG12	2
19.	Loctite Blue	LOC-TITE	0
20.	90 Withdrawal Fitting	8342	2

*Reference 912 Engine, Throttle/Fuel Hookups.

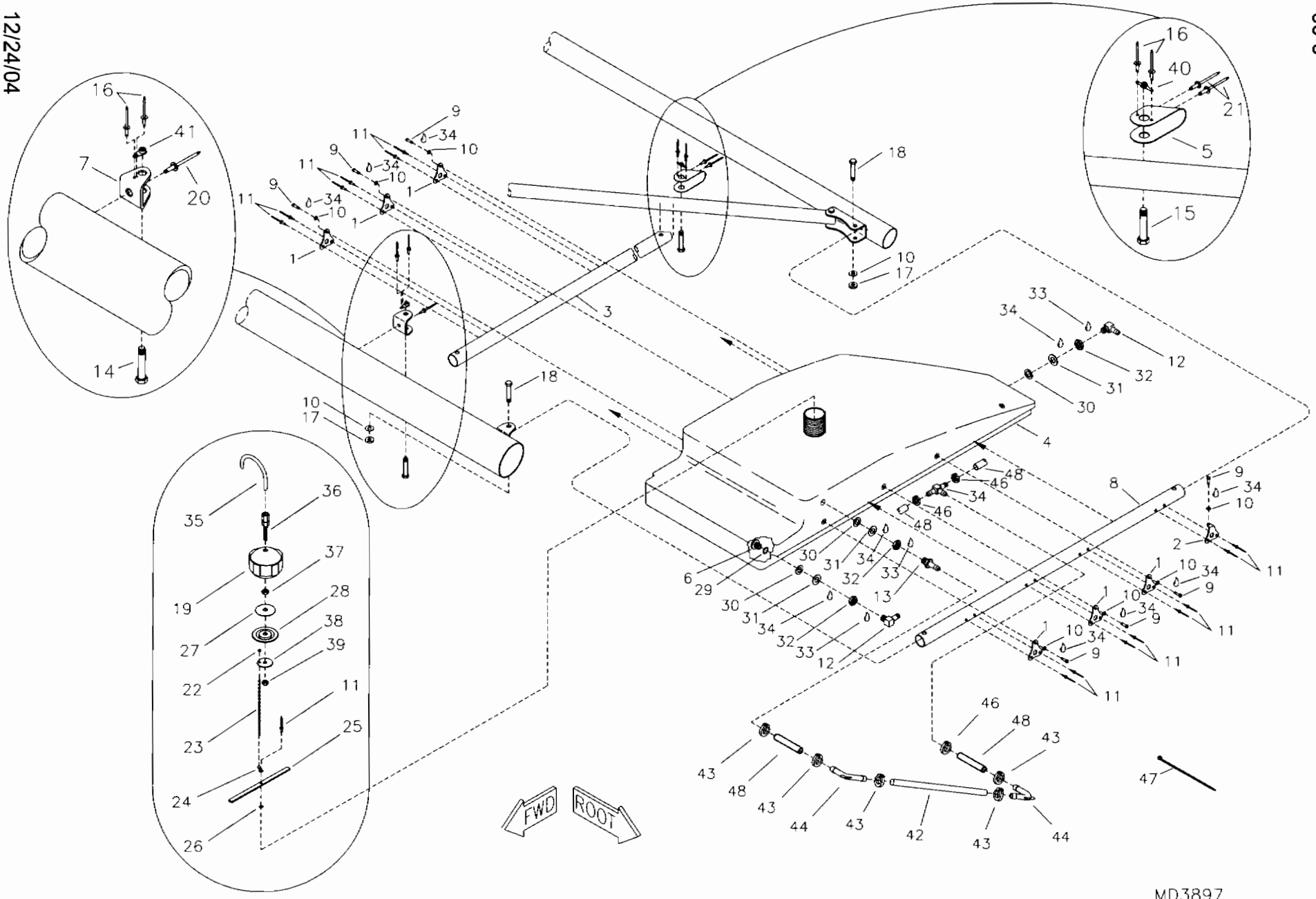

RANS S-18 STINGER II

MD3897
REV. A

FUEL TANK MOUNT – SINGLE WING TANK

S-18 Stinger - Fuel Tank Mount - Single Wing Tank

#	DESCRIPTION	PART NUMBER	QUANTITY
1.	Wing Tank - Mount Bracket	KPFS0007	6
2.	Wing Tank - AFT Mount Bracket, RH	KPFS0011-R	1
3.	Outer Tank Support	KPFS0043	1
4.	Fuel Tank, RH	KPFS0005-R	1
5.	U Bracket	KPAC0055	1
6.	Tank Withdrawal Fitting	KPFS0017	3
7.	Attach Bracket	S2-SAB	1
8.	Inner Compression Tube *	W-IO-151	0
9.	3/16" Bolt	AN3-3A	7
10.	3/16" Thick Washer	AN960-10	9
11.	1/8" Stainless Steel Pop Rivet - Cherry Q	CCPQ-44	15
12.	90 Withdrawal Fitting	8342	2
13.	Straight Withdrawal Fitting	8330	1
14.	3/16" Bolt	AN3-15A	1
15.	3/16" Bolt	AN3-14A	1
16.	3/32" Aluminum Pop Rivet	40APR1/8	4
17.	3/16" Shear Nut *	AN364-1032A	0
18	3/16" Bolt *	AN3-15A	0
19	Fuel Cap	KSFS0007	1
20.	3/16" Stainless Steel Pop Rivet - Cherry Q	CCPQ-64	1
21.	1/8" Stainless Steel Pop Rivet - Cherry Q	CCPQ-42	2
22.	Bead Chain - Retainer Sleeve	KSHW0014	1
23.	#3 Bead Chain	KSHW0012	7 in
24.	Bead Chain - End Coupling	KSHW0013	1
25.	Plastic Retainer	KPFS0012	1
26.	1/8" Small Brass Washer	AN960-B4	1
27.	Plastic Baffle ***	KSFS0012	0
28.	Rubber Gasket ***	KSFS0013	0
29.	O-Ring	KSFS0009	3
30.	Rubber Washer	KSFS0010	3
31.	1/2" Thick Washer	AN960-816	3
32.	Nut-Flared Tube Bulkhead	AN924-5D	3
33.	Thread Sealant **	KSAC0014	0
34.	Loctite Blue	LOC-TITE	0
35.	Vent Tube	KPFS0020	1
36.	Conduit Adjuster Assembly	KSFS0014	1
37.	1/4" Plain Nut	AN345-416	1
38.	1/4" Large Washer	AN970-4	1
39.	1/4" Shear Nut	AN364-428C	1
40.	3/16" Nut Plate	K-1000-3	1
41.	3/16" Single Ear Nut Plate	MS21051-L3	1
42.	Clear Fuel Line 2'	KSFS0008	1
43.	3/8 Line Clamp	FS-LCL 3/8	4
44.	1/4" x 1/4" 90 Fitting	7-11044	2
45.	1/4" Tee	8338	1
46.	Fuel Line Hose Clamp, 5/16"	FS-LCL 5/16	3
47.	Long Nylon Tie	LG-N-TIE	1
48.	1/4" Fuel Line, Blue	FS-FL	0

*Referenced from wing frame assembly.
**Thread Sealant (builder provides) is recommended but Loctite Blue can also be used.
***Supplied with Fuel Cap.

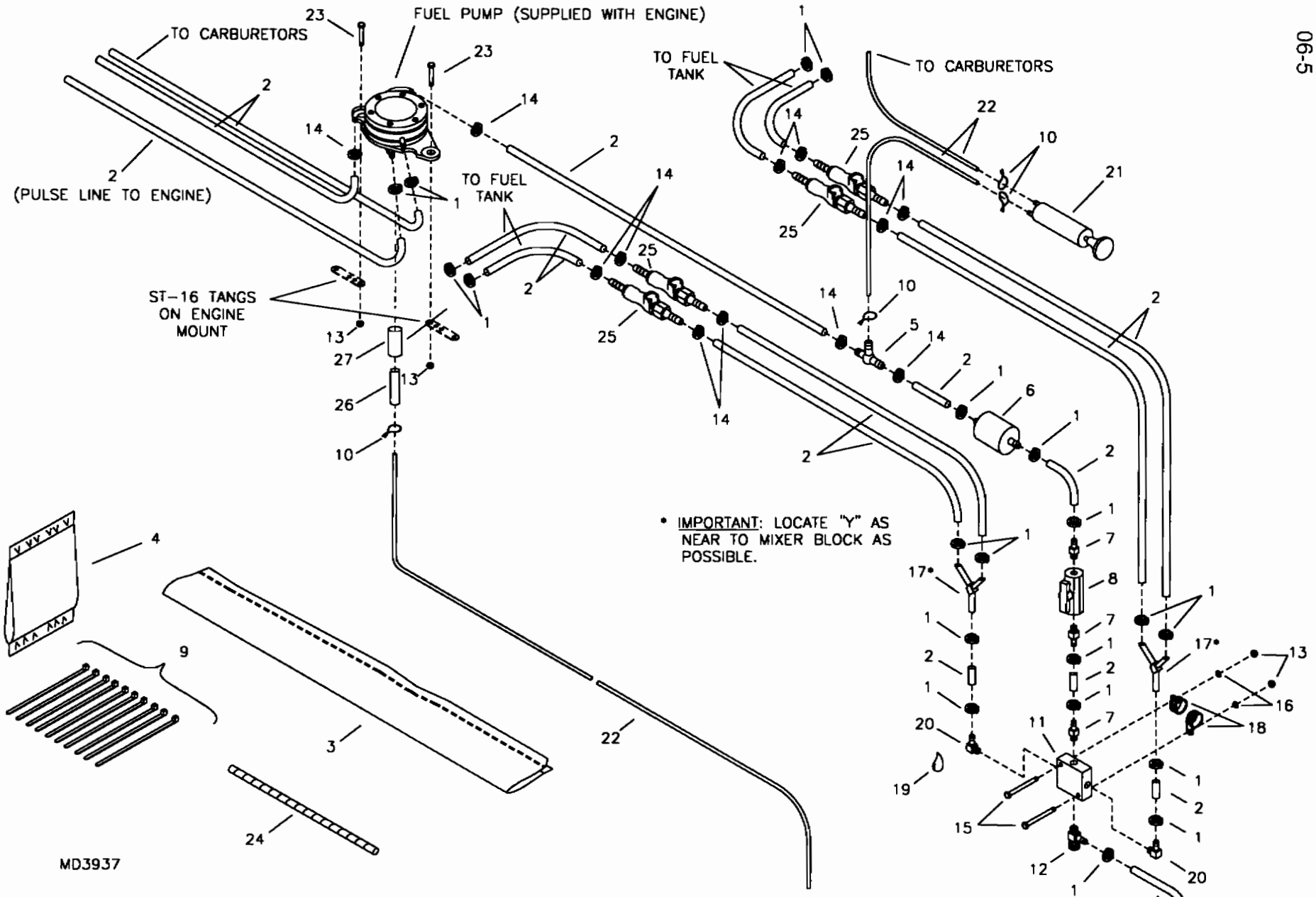

RANS S-18 STINGER
503/582 FUEL SYSTEM, OPTIONAL DUAL WING TANK

S-18 Stinger - 503/582 Fuel System - Optional Dual Wing Tank

In addition to Single Tank System

#	DESCRIPTION	PART NUMBER	QUANTITY
1.	Line Clamp, 3/8"	FS-LCL 3/8	8
2.	1/4" Blue Fuel Line	FS-FL	15 ft
3.	Wire & Fuel Line Cover **	KPCV0032	0
4.	Primer Pump Kit **	DUAL PRIMER(6)	0
5.	Primer Fuel Line T *	PRIME-LINE-T	0
6.	Fuel Filter **	FS-FIL	0
7.	Straight Withdrawal Fitting **	8330	0
8.	Fuel Shut Off Valve **	FS-S-OFF	0
9.	Zip Ties **	ZIP TIES	0
10.	Safety Wire **	SAFETY WIRE	0
11.	Fuel Mixer Block **	FS-FMB	0
12.	Sump Drain Valve **	8336	0
13.	3/16" Shear Nut **	AN364-1032A	0
14.	Line Clamp, 5/16" I.D.	FS-LCL 5/16ID	4
15.	3/16" Bolt **	AN3-11A	0
16.	3/16" Thick Washer **	AN960-10	0
17.	Fuel Line "Y" Connector	8345	2
18.	3/4" Cushioned Tube Clamp **	MS21919-DG12	0
19.	Loctite Blue **	LOC-TITE	0
20.	90 Withdrawal Fitting **	8342	0
21.	Primer Pump *	PRIME-PUMP	0
22.	1/8" Primer Line **	PRIMER LINE	0
23.	3/16" Bolt **	AN3-7A	0
24.	Coil Wrap **	1/2 SPIRAL LOOM	0 ft
25.	1/4" Fuel Line Quick Disconnect,Male & Female Pair	1/4 QUICK DISCONNECT	2
26.	5/16" Overflow Hose **	EGCS-OFH	0 ft
27.	Shrink Wrap **	KSAC0006	0 in

*Supplied with Primer Kit.
**Referenced.

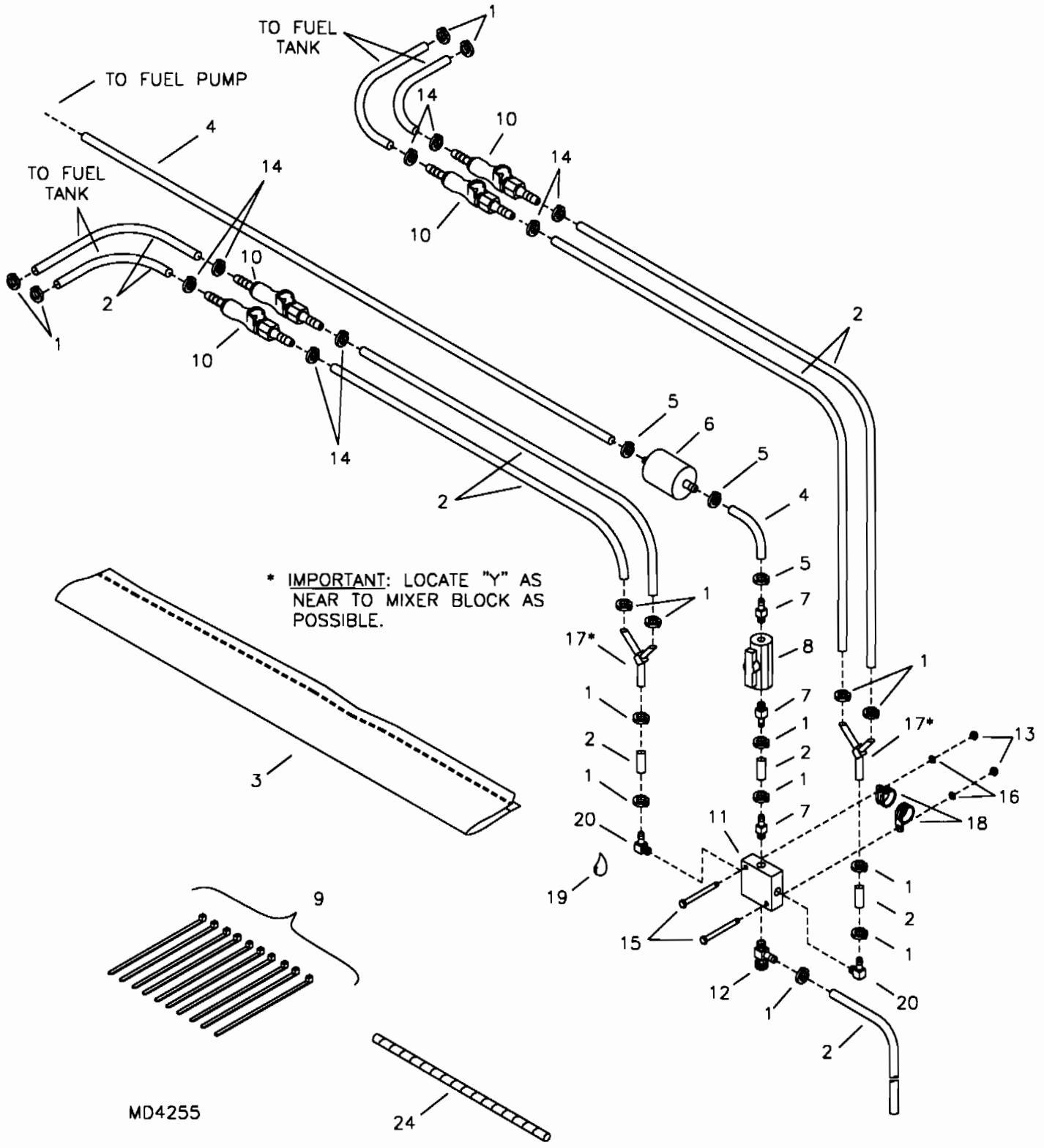

RANS S-18 STINGER
912 FUEL SYSTEM, OPTIONAL DUAL WING TANK

S-18 Stinger - 912 Fuel System - Optional Dual Wing Tank

In addition to Single Tank System

#	DESCRIPTION	PART NUMBER	QUANTITY
1.	Line Clamp, 3/8"	FS-LCL 3/8	8
2.	1/4" Blue Fuel Line	FS-FL	15 ft
3.	Wire & Fuel Line Cover **	KPCV0032	0
4.	1/4" Black Fuel Line *	27002A	0 ft
5.	Small Hose Clamp **	5-6202	0
6.	Fuel Filter **	FS-FIL	0
7.	Straight Withdrawal Fitting **	8330	0
8.	Fuel Shut Off Valve **	FS-S-OFF	0
9.	Zip Ties **	ZIP TIES	0
10.	1/4" Fuel Line Quick Disconnect,Male & Female Pair	1/4 QUICK DISCONNECT	2
11.	Fuel Mixer Block **	FS-FMB	0
12.	Sump Drain Valve **	8336	0
13.	3/16" Shear Nut **	AN364-1032A	0
14.	Line Clamp, 5/16" I.D.	FS-LCL 5/16ID	4
15.	3/16" Bolt **	AN3-11A	0
16.	3/16" Thick Washer **	AN960-10	0
17.	Fuel Line "Y" Connector	8345	2
18.	3/4" Cushioned Tube Clamp **	MS21919-DG12	0
19.	Loctite Blue **	LOC-TITE	0
20.	90 Withdrawal Fitting **	8342	0
21.	Coil Wrap **	1/2 SPIRAL LOOM	0 ft

*Reference 912 Engine, Throttle/ Fuel Hookup.
**Referenced.

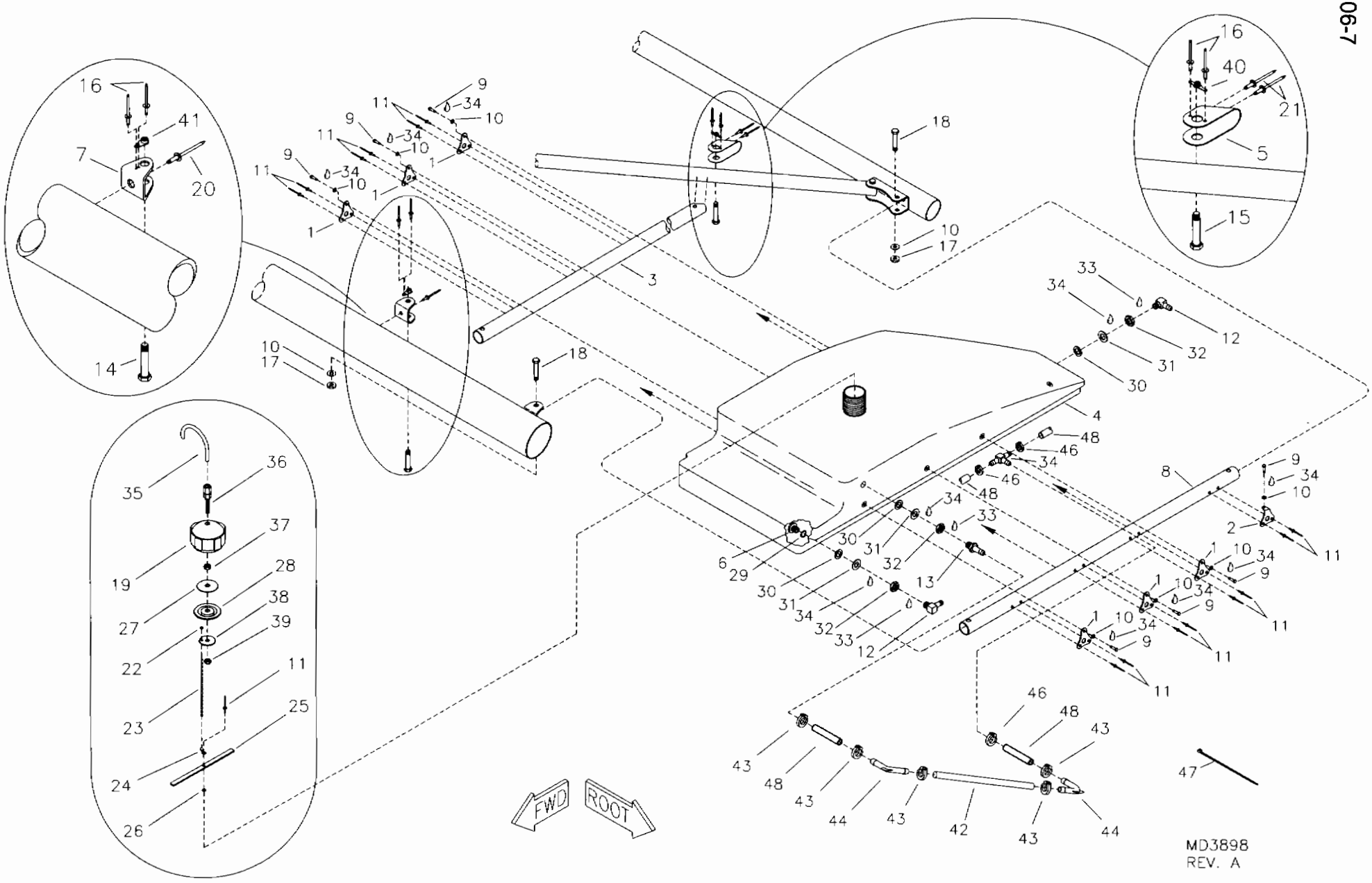

RANS S-18 STINGER II

FUEL TANK MOUNT – OPTIONAL DUAL WING TANK

S-18 Stinger - Fuel Tank Mount - Optional Dual Wing Tank

In addition to Single Tank System

#	DESCRIPTION	PART NUMBER	QUANTITY
1.	Wing Tank - Mount Bracket	KPFS0007	6
2.	Wing Tank - AFT Mount Bracket, LH	KPFS0011-L	1
3.	Outer Tank Support	KPFS0043	1
4.	Fuel Tank, LH	KPFS0005-L	1
5.	U Bracket	KPAC0055	1
6.	Tank Withdrawal Fitting	KPFS0017	3
7.	Attach Bracket	S2-SAB	1
8.	Inner Compression Tube *	W-IO-151	0
9.	3/16" Bolt	AN3-3A	7
10.	3/16" Thick Washer	AN960-10	9
11.	1/8" Stainless Steel Pop Rivet - Cherry Q	CCPQ-44	15
12.	90 Withdrawal Fitting	8342	2
13.	Straight Withdrawal Fitting	8330	1
14.	3/16" Bolt	AN3-15A	1
15.	3/16" Bolt	AN3-14A	1
16.	3/32" Aluminum Pop Rivet	40APR1/8	4
17.	3/16" Shear Nut *	AN364-1032A	0
18.	3/16" Bolt *	AN3-15A	0
19.	Fuel Cap	KSFS0007	1
20.	3/16" Stainless Steel Pop Rivet - Cherry Q	CCPQ-64	1
21.	1/8" Stainless Steel Pop Rivet - Cherry Q	CCPQ-42	2
22.	Bead Chain - Retainer Sleeve	KSHW0014	1
23.	#3 Bead Chain	KSHW0012	7 in
24.	Bead Chain - End Coupling	KSHW0013	1
25.	Plastic Retainer	KPFS0012	1
26.	1/8" Small Brass Washer	AN960-B4	1
27.	Plastic Baffle ***	KSFS0012	0
28.	Rubber Gasket ***	KSFS0013	0
29.	O-Ring	KSFS0009	3
30.	Rubber Washer	KSFS0010	3
31.	1/2" Thick Washer	AN960-816	3
32	Nut-Flared Tube Bulkhead	AN924-5D	3
33.	Thread Sealant **	KSAC0014	0
34.	Loctite Blue	LOC-TITE	0
35.	Vent Tube	KPFS0020	1
36.	Conduit Adjuster Assembly	KSFS0014	1
37.	1/4" Plain Nut	AN345-416	1
38.	1/4" Large Washer	AN970-4	1
39.	1/4" Shear Nut	AN364-428C	1
40.	3/16" Nut Plate	K-1000-3	1
41.	3/16" Single Ear Nut Plate	MS21051-L3	1
42.	Clear Fuel Line 2'	KSFS0008	1
43.	3/8 Line Clamp	FS-LCL 3/8	4
44.	1/4" x 1/4" 90 Fitting	7-11044	2
45.	1/4" Tee	8338	1
46.	Fuel Line Hose Clamp, 5/16"	FS-LCL 5/16	3
47.	Long Nylon Tie	LG-N-TIE	1
48.	1/4" Fuel Line, Blue	FS-FL	0

*Referenced from wing frame assembly.
**Thread Sealant (builder provides) is recommended but Loctite Blue can also be used.
***Supplied with Fuel Cap.

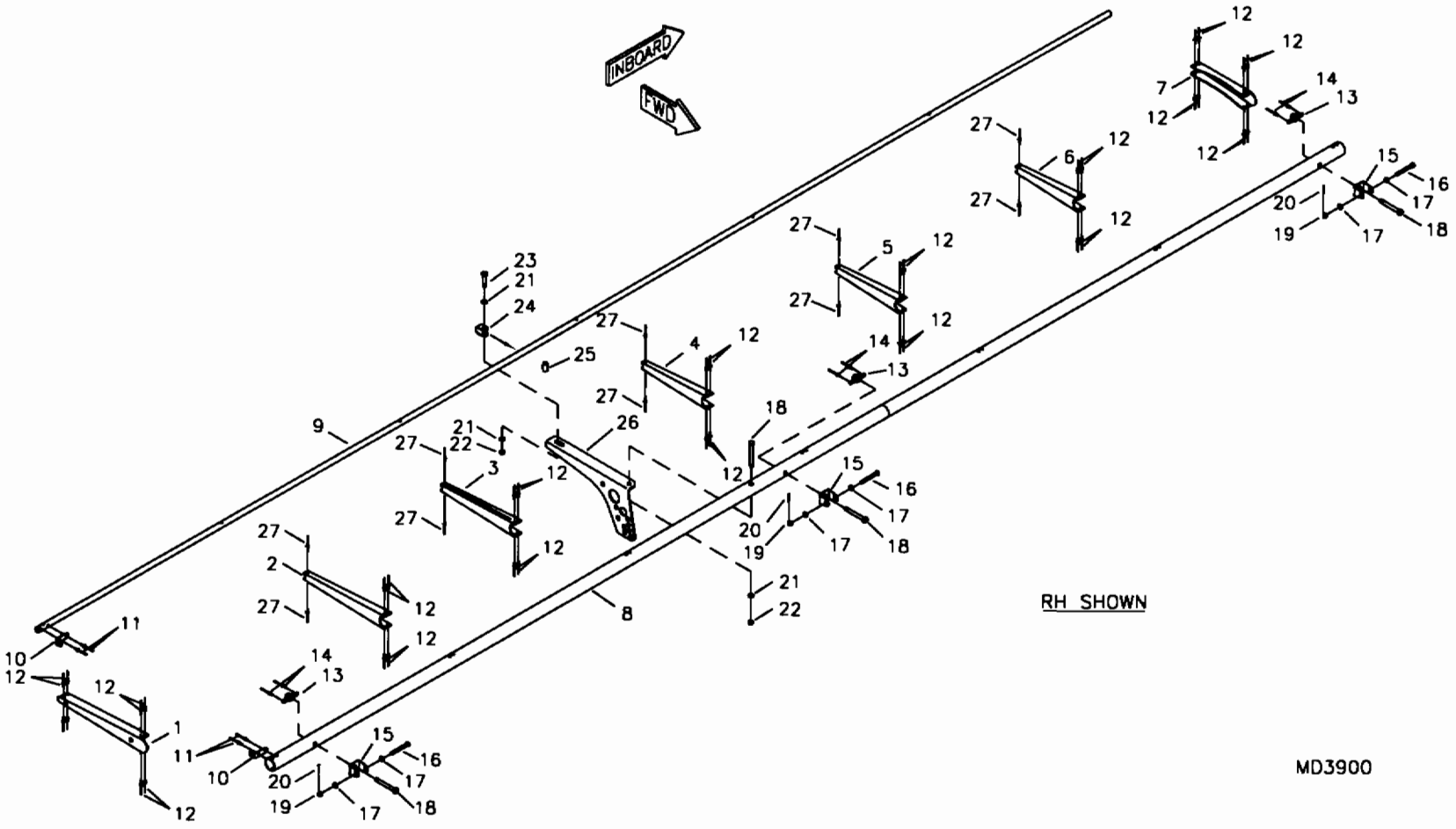

RANS S-18 STINGER II
FLAP FRAME ASSEMBLY

S-18 Stinger - Flap Frame Assembly

#	DESCRIPTION	PART NUMBER	QUANTITY
1.	Flap/Aileron Rib #1	KPAL0006	2
2.	Flap/Aileron Rib #2	KPAL0007	2
3.	Flap/Aileron Rib #3	KPAL0008	2
4.	Flap/Aileron Rib #4	KPAL0009	2
5.	Flap/Aileron Rib #5	KPAL0010	2
6.	Flap/Aileron Rib #6	KPAL0011	2
7.	Flap/Aileron Rib #7	KPAL0012	2
8.	Flap Spar Assembly	KPFL0030	2
9.	Flap/Aileron Trailing Edge Spar	KPAL0014	2
10.	Trim Tab Hinge	ST-16-BENT	4
11.	3/16" Aluminum Pop Rivet - Cherry Q	AAPQ-62	8
12.	1/8" Aluminum Pop Rivet - Cherry Q	AAPQ-42	72
13.	3/16" Nut Plate	K-1000-3	6
14.	3/32" Aluminum Pop Rivet	40APR1/8	12
15.	Hinge Bracket	W-HB	6
16.	3/16" Bolt	AN3-15	6
17.	3/16" Thick Washer	AN960-10	12
18.	3/16" Bolt	AN3-14A	8
19.	3/16" Castle Nut	AN310-3	6
20.	Small Cotter Pin	MS24665-134	6
21.	3/16" Thin Washer	AN960-10L	6
22.	3/16" Shear Acorn Nut	22NKM02	4
23.	3/16" Bolt	AN3-10A	2
24.	Aileron Clip	W-A-CLIP	2
25.	Aluminum Bushing, 1/4" x 0.28 x 1/2" *	KAAC0038-5	0
26.	Flap/Aileron Horn Attach Angle, RH	KPAL0015-R	1
26.	Flap/Aileron Horn Attach Angle, LH	KPAL0015-L	1
27.	1/8" Aluminum Pop Rivet - Cherry Q	AAPQ-41	20

*Builder must fabricate from Raw Stock.

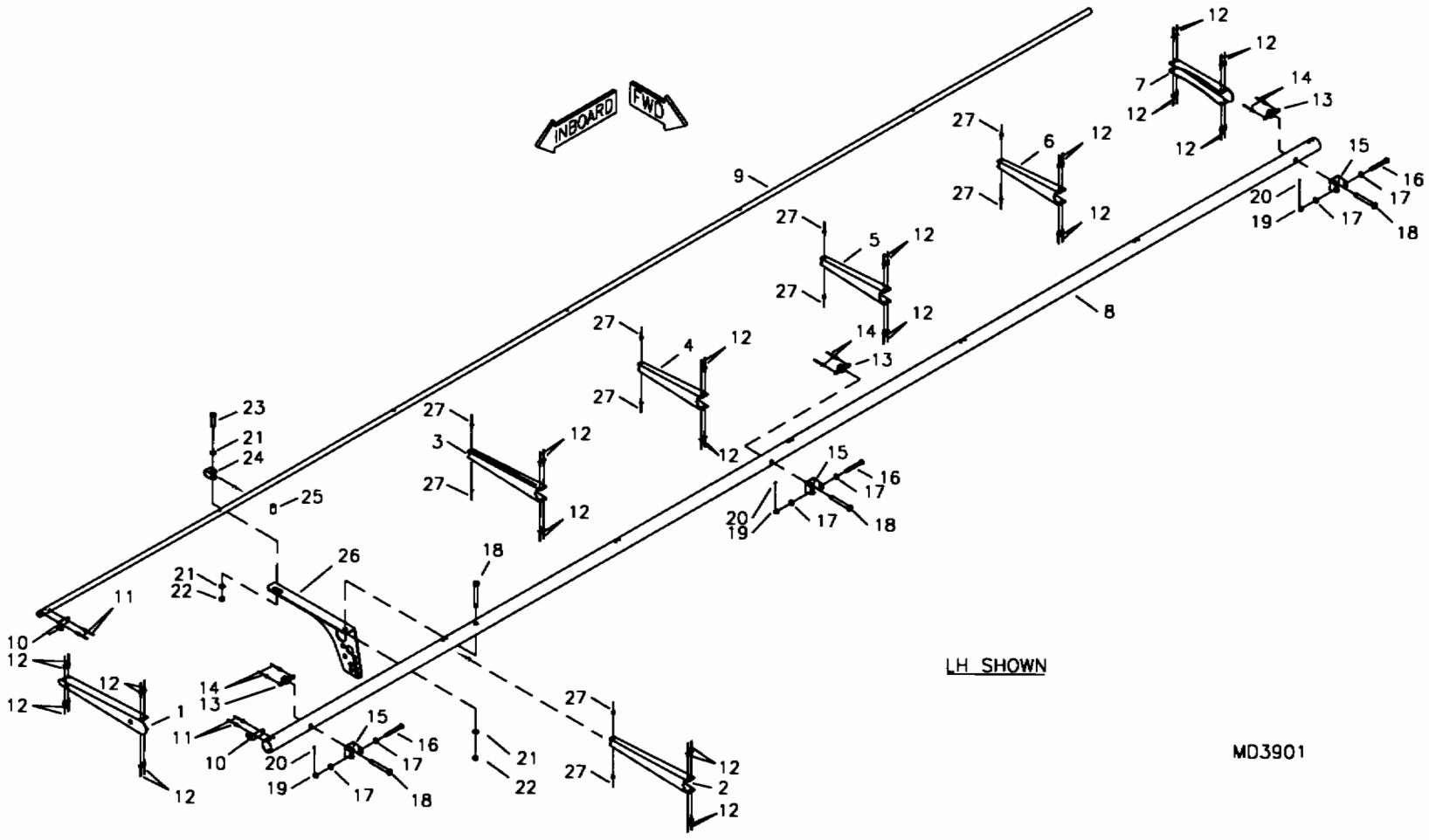

RANS S-18 STINGER II
AILERON FRAME ASSEMBLY

S-18 Stinger - Aileron Frame Assembly

#	DESCRIPTION	PART NUMBER	QUANTITY
1.	Flap/Aileron Rib #1	KPAL0006	2
2.	Flap/Aileron Rib #2	KPAL0007	2
3.	Flap/Aileron Rib #3	KPAL0008	2
4.	Flap/Aileron Rib #4	KPAL0009	2
5.	Flap/Aileron Rib #5	KPAL0010	2
6.	Flap/Aileron Rib #6	KPAL0011	2
7.	Flap/Aileron Rib #7	KPAL0012	2
8.	Aileron Spar	KPAL0005	2
9.	Flap/Aileron Trailing Edge Spar	KPAL0014	2
10.	Trim Tab Hinge	ST-16-BENT	4
11.	3/16" Aluminum Pop Rivet - Cherry Q	AAPQ-62	8
12.	1/8" Aluminum Pop Rivet - Cherry Q	AAPQ-42	72
13.	3/16" Nut Plate	K-1000-3	6
14.	3/32" Aluminum Pop Rivet	40APR1/8	12
15.	Hinge Bracket	W-HB	6
16.	3/16" Bolt	AN3-15	6
17.	3/16" Thick Washer	AN960-10	12
18.	3/16" Bolt	AN3-14A	8
19.	3/16" Castle Nut	AN310-3	6
20.	Small Cotter Pin	MS24665-134	6
21.	3/16" Thin Washer	AN960-10L	6
22.	3/16" Shear Acorn Nut	22NKM02	4
23.	3/16" Bolt	AN3-10A	2
24.	Aileron Clip	W-A-CLIP	2
25.	Aluminum Bushing, 1/4" x 0.28 x 1/2" *	KAAC0038-5	0
26.	Flap/Aileron Horn Attach Angle, LH	KPAL0015-L	1
26.	Flap/Aileron Horn Attach Angle, RH	KPAL0015-R	1
27.	1/8" Aluminum Pop Rivet - Cherry Q	AAPQ-41	20

*Builder must fabricate from Raw Stock.

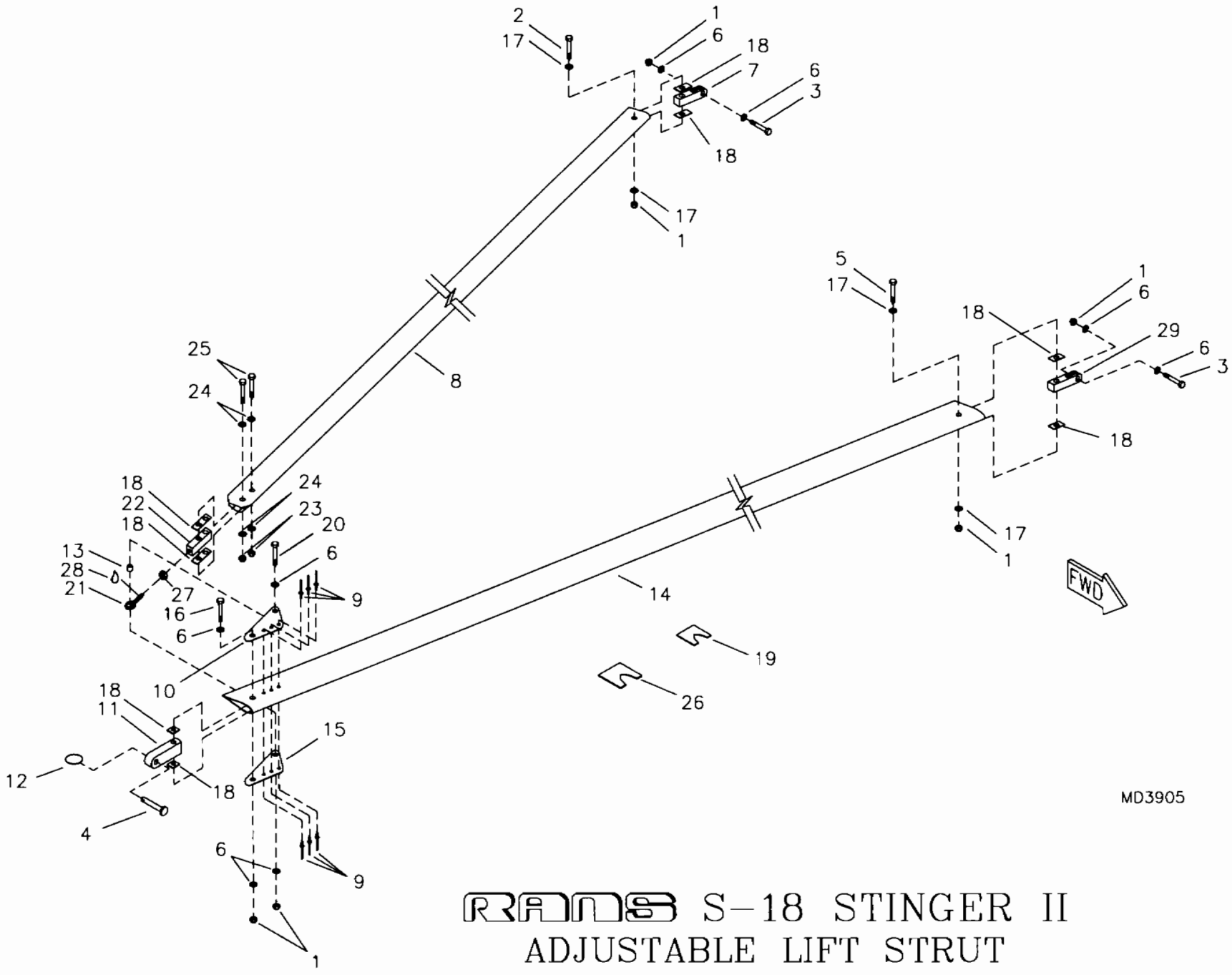

RANS S-18 STINGER II
ADJUSTABLE LIFT STRUT

S-18 Stinger - Adjustable Lift Strut

#	DESCRIPTION	PART NUMBER	QUANTITY
1.	5/16" Shear Nut	AN364-524A	12
2.	5/16" Bolt	AN5-13A	2
3.	5/16" Bolt	AN5-12A	4
4.	5/16" Clevis Pin	MS20392-4C33	2
5.	5/16" Bolt	AN5-15A	2
6.	5/16" Thick Washer	AN960-516	16
7.	AFT Upper Lift Strut Connector	LS-ACU-2	2
8.	AFT Lift Strut	KPLS0008	2
9.	3/16" Stainless Steel Pop Rivet - Cherry Q	CCPQ-64	12
10.	AFT Lift Strut Gusset	116-S-GUSS-A	2
11.	Lower Strut Fitting - FWD - LH	KPLS0013-L	1
11.	Lower Strut Fitting - FWD - RH	KPLS0013-R	1
12.	Loc Ring	RL 27 5/16	2
13.	Aluminum Bushing, 3/8" x .035 x 1/2" **	KAAC0038-10	0
14.	FWD Lift Strut	KPLS0007	2
15.	AFT Lift Strut Gusset	116-S-GUSS-B	2
16.	5/16" Bolt	AN5-17A	2
17.	5/16" Thin Washer	AN960-516L	8
18.	Shim *	UNV-SHIM	4
19.	Small Lift Strut Chord Template	KPLS0004	1
20.	5/16" Bolt	AN5-11A	2
21.	Rod End	3/8X24 ROD END	2
22.	Adjustor End	S-AE-3/4	2
23.	3/16" Shear Acorn Nut	22NKM02	4
24.	3/16" Thick Washer	AN960-10	8
25.	3/16" Bolt	AN3-13A	4
26.	Large Lift Strut Chord Template	KPLS0003	1
27.	3/8" Plain Nut	MS35650-3382	2
28.	Loctite Blue	LOC-TITE	0
29.	Upper Strut Fitting - FWD	KPLS0012	2

*Make shim from .020 blank provided if necessary.
**Builder fabricates from 3/8X.058. Drill out bushing to 5/16".

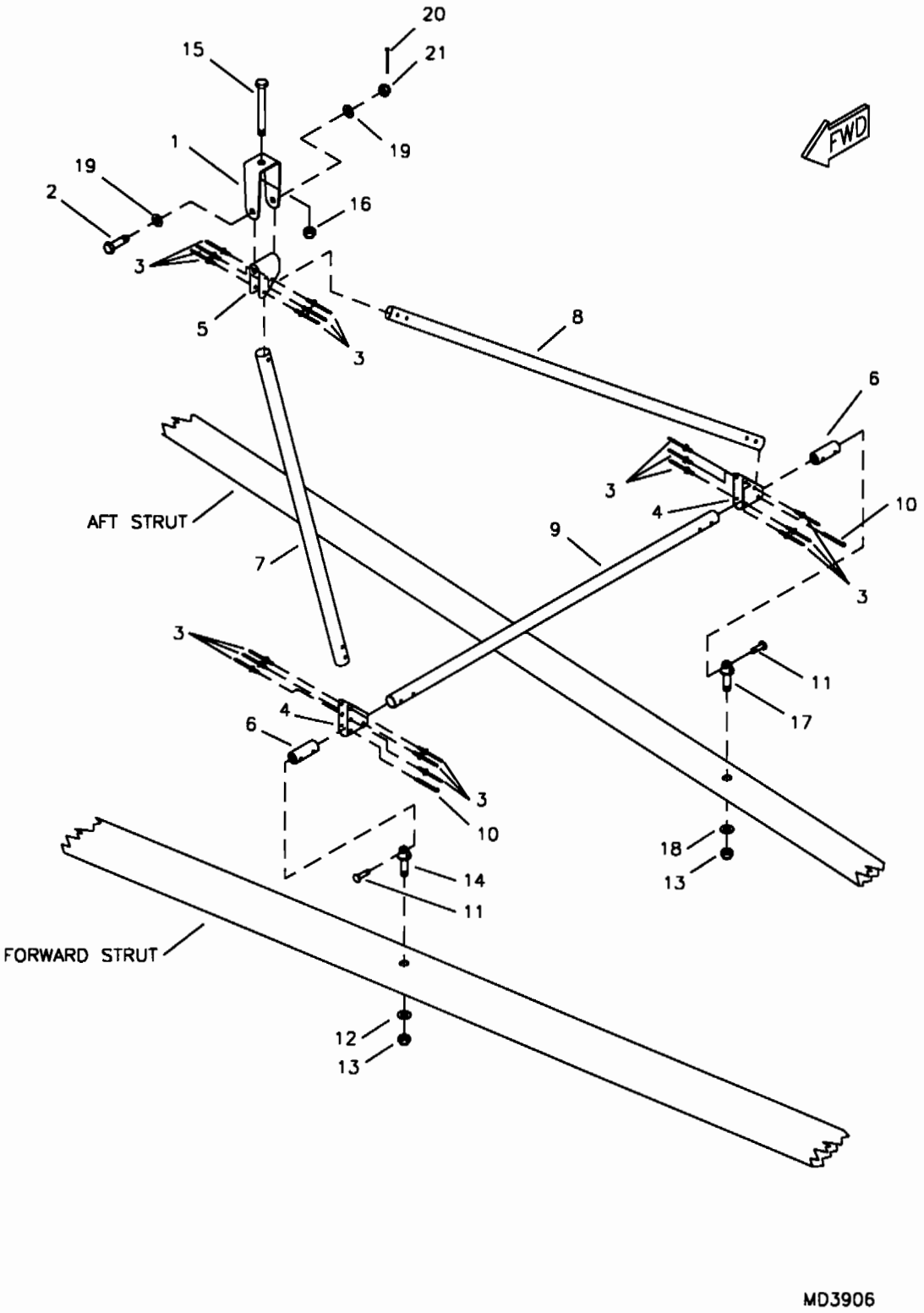

RANS S-18 STINGER II
JURY STRUT ASSEMBLY

S-18 Stinger - Jury Strut Assembly

#	DESCRIPTION	PART NUMBER	QUANTITY
1.	Jury Strut Bracket **	JS-BK	0
2.	3/16" Bolt	AN3-15	2
3.	1/8" Stainless Steel Pop Rivet - Cherry Q	CCPQ-42	36
4.	Gusset	JS-JGN	4
5.	Gusset	JS-JGNW	2
6.	Drilled Bushing Aluminum Insert	JS-BUC-B	4
7.	Forward Jury Strut, 1/2" .035 x 19 1/8" *	KAAC0038-6	0
8.	Diagonal Jury Strut, 1/2" .035 x 32 7/8" *	KAAC0038-6	0
9.	Cross Strut, 1/2" x .035 x 23 3/16" *	KAAC0038-6	0
10.	Small Cotter Pin	MS24665-134	4
11.	3/16" Clevis Pin	MS20392-2C17	4
12.	1/4" Thin Washer	AN960-416L	2
13.	1/4" Tensile Acorn Nut	42NKE-048	4
14.	1/4" Eyebolt	AN43B-15A	2
15.	3/16" Bolt **	AN3-16A	0
16.	3/16" Tensile Nut **	AN365-1032A	0
17.	1/4" Eyebolt	AN43B-14A	2
18.	1/4" Thick Washer	AN960-416	2
19.	3/16" Thick Washer	AN960-10	4
20.	Small Cotter Pin	MS24665-134	2
21.	3/16" Castle Nut	AN310-3	2

*Builder must fabricate from Raw Stock.
**Referenced from internal structure.

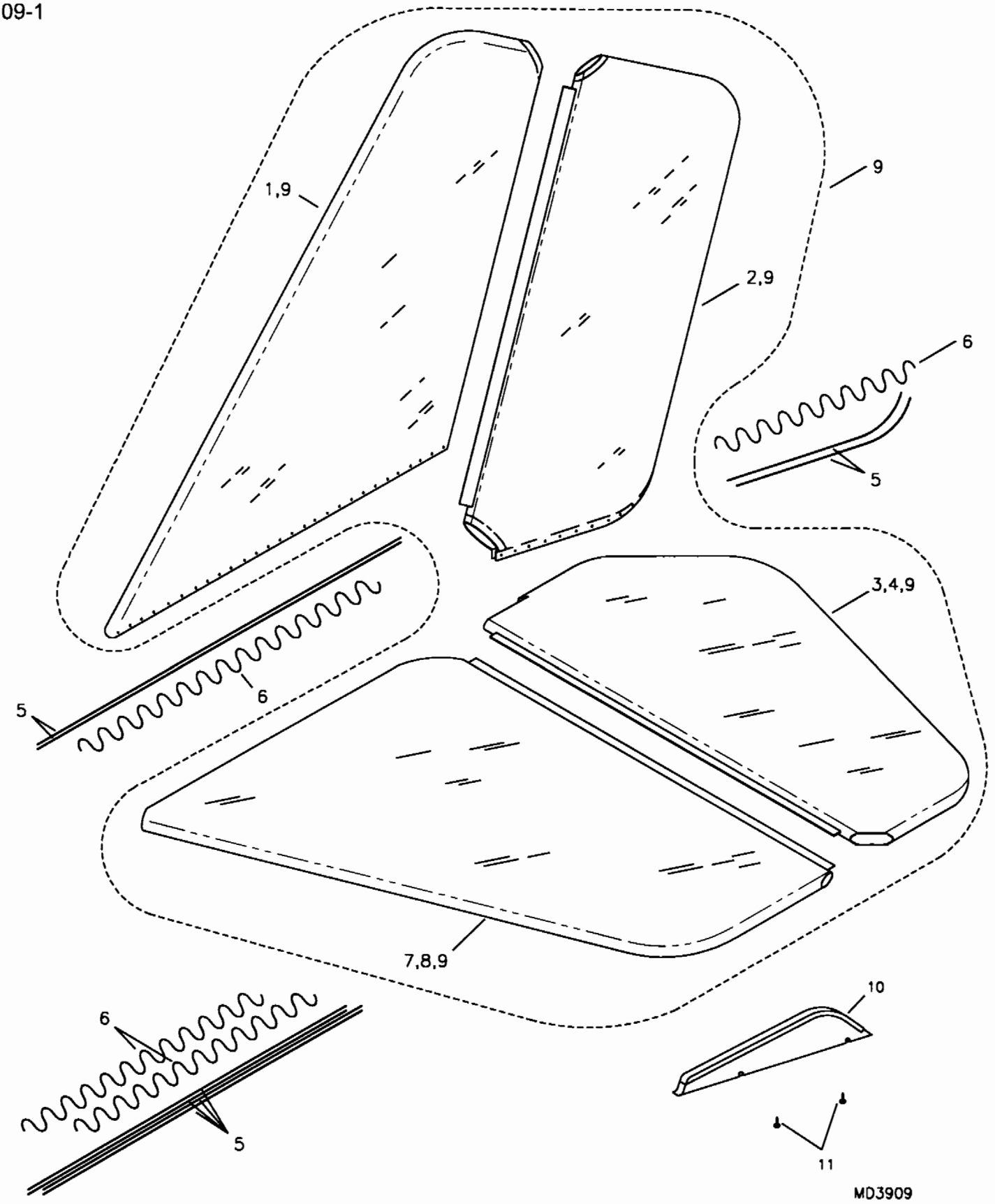

RANS S-18 STINGER II
TAIL GROUP DACRON COVERS AND HARDWARE

S-18 Stinger - Tail Group Dacron Covers and Hardware

#	DESCRIPTION	PART NUMBER	QUANTITY
1.	Vertical Stabilizer Dacron Cover *	KICV0001-7	1
2.	Rudder Dacron Cover *	KICV0001-8	1
3.	Elevator Dacron Cover, LH *	KICV0001-11	1
4.	Elevator Dacron Cover, RH *	KICV0001-12	1
5.	Lacing Wires, 36" x 1/16" (stick)	TG-LW-1/16	8
6.	Nylon Lace Up Rope	36 SEINE	36 ft
7.	Horizontal Stabilizer Dacron Cover, LH *	KICV0001-9	1
8.	Horizontal Stabilizer Dacron Cover, RH *	KICV0001-10	1
9.	S-18 Stinger Covering Kit	KICV0001	1
10.	Rudder Lacing Cap **	KPRD0035	1
11.	#6 Small Pan Head Screw	6RX1/2 PHS	2

*Supplied with covering kit (KICV0001).
**Builder trims to fit. Refer to text for details.

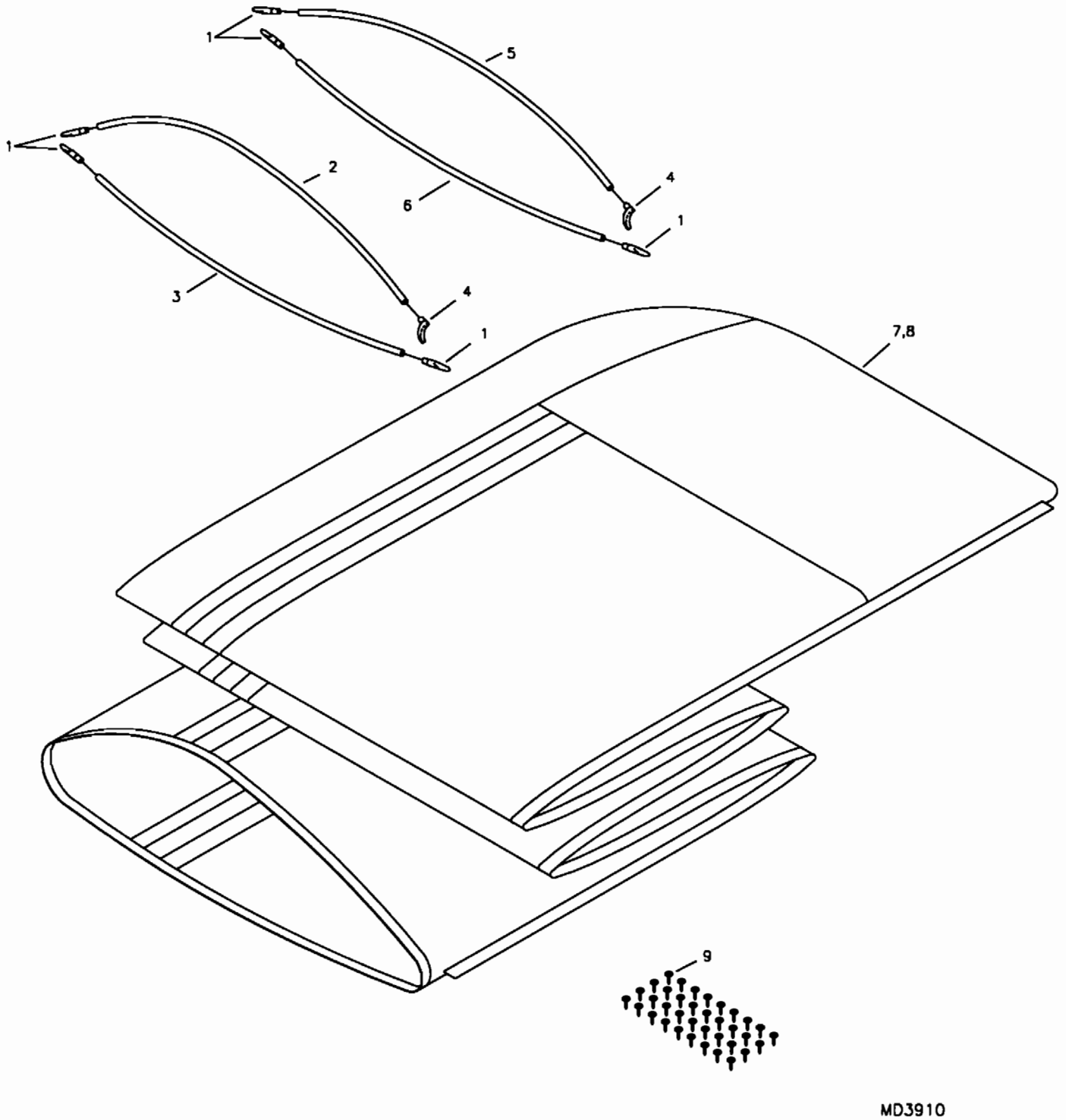

RANS S-18 STINGER II
WING DACRON COVERS AND HARDWARE

S-18 Stinger - Wing Dacron Covers and Hardware

#	DESCRIPTION	PART NUMBER	QUANTITY
1.	Rib Tip	RIB-TIP	48
2.	Wing - Top Rib	KPWI0093	14
3.	Wing - Bottom Rib	KPWI0094	14
4.	Rib-Contour Fitting	CON-2	16
5.	Wing - Top Tip Rib	KPWI0098	2
6.	Wing - Bottom Tip Rib	KPWI0097	2
7.	Wing-Dacron Cover, RH *	KICV0001-2	1
8.	Wing-Dacron Cover, LH *	KICV0001-1	1
9.	#8 Pan Head Screw **	8X1/2 PHS	0

*Supplied with covering kit (KICV0001).
**Referenced from root rib tensioning system.

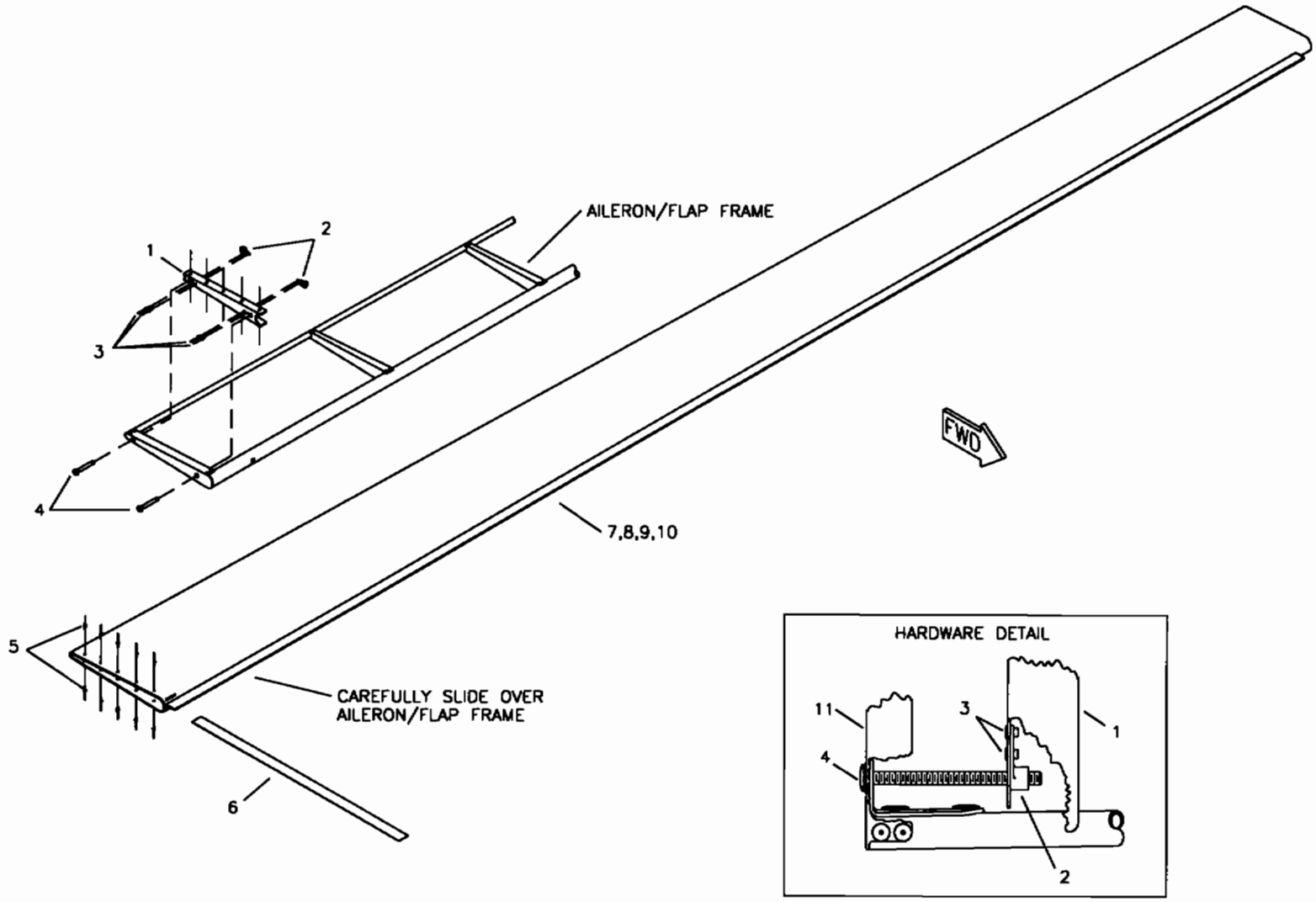

MD3911

RANS S-18 STINGER II
AILERON/FLAP DACRON COVERS AND HARDWARE

S-18 Stinger - Aileron/Flap Dacron Covers and Hardware

#	DESCRIPTION	PART NUMBER	QUANTITY
1.	Flap/Aileron Tensioning Rib	KPAL0013	4
2.	3/16" Single Ear Nut Plate	MS21051-L3	8
3.	3/32" Aluminum Pop Rivet	40APR1/8	16
4.	Aileron Flap Tension Bolt	10/32 X 2 1/2SSPAN	8
5.	1/8" Aluminum Pop Rivet - Cherry Q	AAPQ-42	40
6.	Flap/Aileron-Tension Strip	KPFL0031	4
7.	Flap Dacron Cover, LH *	KICV0001-3	1
8.	Flap Dacron Cover, RH *	KICV0001-4	1
9.	Aileron Dacron Cover, RH *	KICV0001-5	1
10.	Aileron Dacron Cover, LH *	KICV0001-6	1
11.	Flap/Aileron Rib #1 **	KPAL0006	0

*Supplied with covering kit (KICV0001).
**Referenced from Flap/Aileron Frame Assembly.

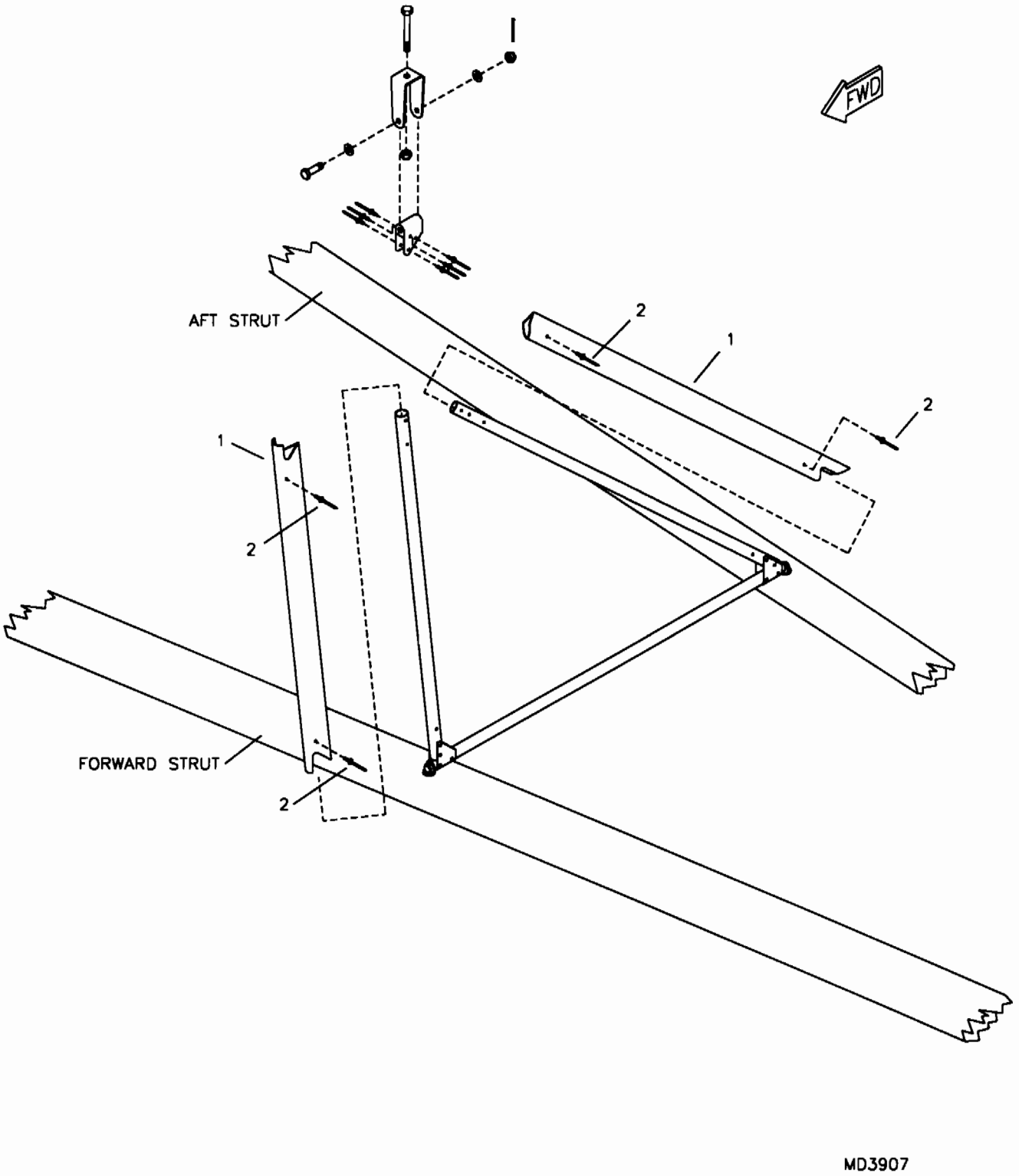

RANS S-18 STINGER II
OPTIONAL JURY STRUT FAIRING INSTALLATION

S-18 Stinger - Optional Jury Strut Fairing Installation

#	DESCRIPTION	PART NUMBER	QUANTITY
1.	Jury Strut Fairing	JS-FAIR	2
2.	3/32" Aluminum Pop Rivet	40APR1/8	8

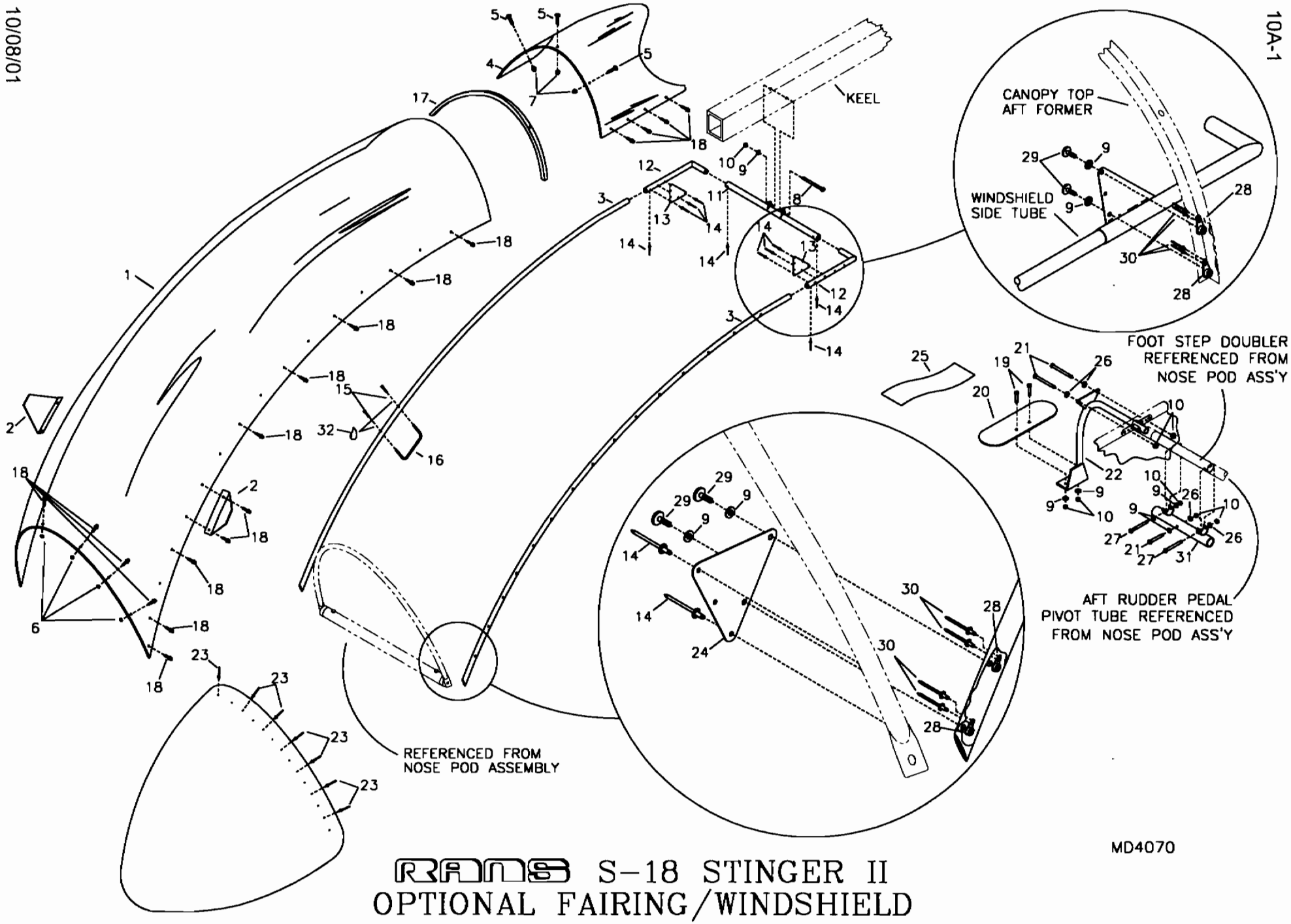

RANS S-18 STINGER II
OPTIONAL FAIRING/WINDSHIELD ASSEMBLY

S-18 Stinger - Optional Fairing / Windshield Assembly

#	DESCRIPTION	PART NUMBER	QUANTITY
1.	Canopy	KPWS0024	1
2.	Vortex Generator	KPWS0023	2
3.	Windshield Side Tube	KPFU0334	2
4.	Upper-Canopy	KPWS0022	1
5.	3/16" Countersunk Machine Bolt	AN509-1032R14	3
6.	1/4" Thin Washer	AN960-416L	9
7.	3/16" Shear Acorn Nut	22NKM02	3
8.	3/16" Bolt	AN3-25A	1
9.	3/16" Thin Washer	AN960-10L	12
10.	3/16" Shear Nut	AN364-1032A	7
11.	Windshield Tube Keel Connect Tube	KPFU0337	1
12.	90 Degree Elbow	KPFU0338	2
13.	Gusset-Canopy Top Aft Former-LH	KPFU0336-L	1
13.	Gusset-Canopy Top Aft Former-RH	KPFU0336-R	1
14.	1/8" Stainless Steel Pop Rivet - Cherry Q	CCPQ-42	19
15.	3/16" Bolt	AN3-10A	2
16.	Handle-Canopy	KPFU0335	1
17.	Canopy Top Aft Former	KPFU0333	1
18.	Screw Rivet	M60-0580-01	50
19.	3/16" Countersunk Machine Bolt	MS24694S50	2
20.	S-18 Foot Step	KPFU0347	1
21.	3/16" Bolt	AN3-12A	3
22.	Footstep Mount Bracket	KPFU0344	1
23.	1/8" Aluminum Pop Rivet - Cherry Q	AAPQ-44	27
24.	Fairing Gusset	KPFU0326	2
25.	Anti-Slip Tape, 2" Abrasive	KSAC0045	8 in
26.	3/16" Thick Washer	AN960-10	4
27.	3/16" Bolt	AN3-14A	2
28.	8-32 Single Ear Nut Plate	MS21051-08	8
29.	8-32 Machine Bolt	AN526-832R6	8
30.	3/32" Aluminum Pop Rivet	40APR1/8	20
31.	Step Socket	KPFU0345	1
32.	Loctite Blue *	LOC-TITE	0

*Builder Supplied.

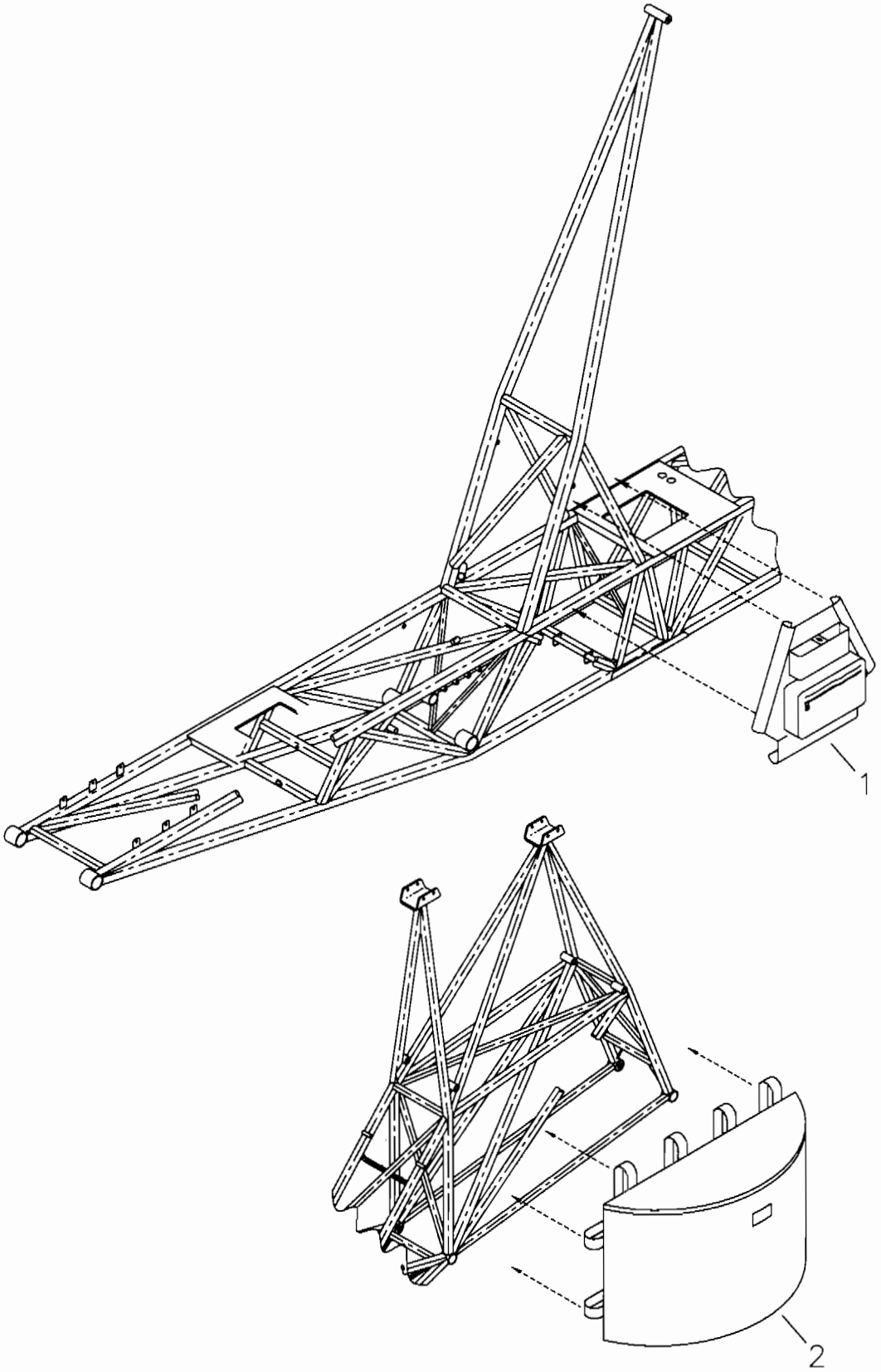

MD4148

RANS S-18 STINGER II
OPTIONAL PLANNIERS
AND INTERCOM BAG

S-18 Stinger - Optional Planniers & Intercom

#	DESCRIPTION	PART NUMBER	QUANTITY
1.	Intercom Bag	KPIN0049	1
2.	Planniers*	KPIN0048	1

*Up to 2 Planniers available.

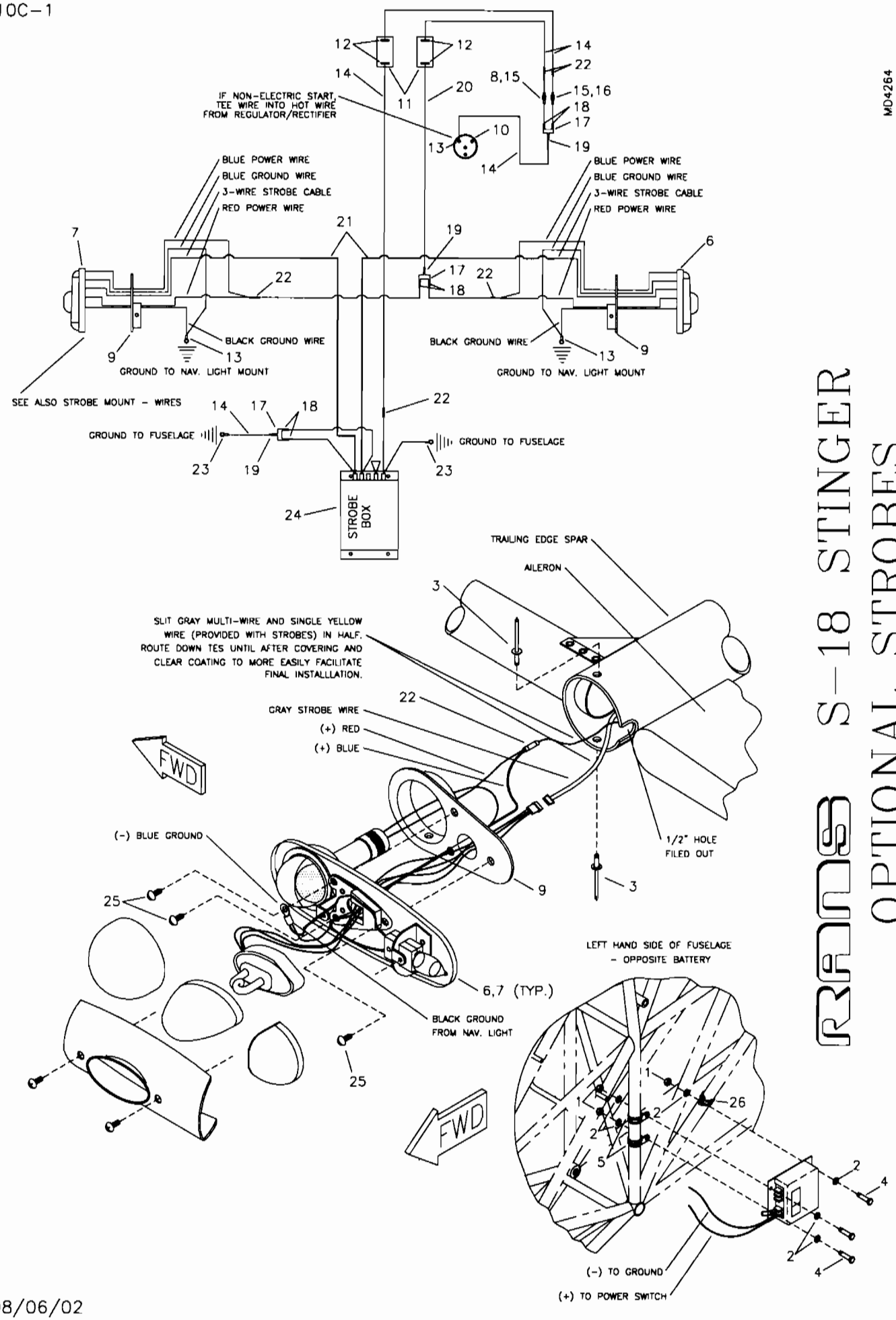
RANS S-18 STINGER
OPTIONAL STROBES
MD4264
IF NON-ELECTRIC START, TEE WIRE INTO HOT WIRE FROM REGULATOR/RECTIFIER
BLUE POWER WIRE
BLUE GROUND WIRE
3-WIRE STROBE CABLE
RED POWER WIRE
BLACK GROUND WIRE
GROUND TO NAV. LIGHT MOUNT
SEE ALSO STROBE MOUNT - WIRES
GROUND TO FUSELAGE
STROBE BOX
TRAILING EDGE SPAR
AILERON
SLIT GRAY MULTI-WIRE AND SINGLE YELLOW WIRE (PROVIDED WITH STROBES) IN HALF. ROUTE DOWN TES UNTIL AFTER COVERING AND CLEAR COATING TO MORE EASILY FACILITATE FINAL INSTALLLATION.
GRAY STROBE WIRE
(+) RED
(+) BLUE
FWD
(-) BLUE GROUND
1/2" HOLE FILED OUT
6,7 (TYP.)
BLACK GROUND FROM NAV. LIGHT
LEFT HAND SIDE OF FUSELAGE - OPPOSITE BATTERY
(-) TO GROUND
(+) TO POWER SWITCH

S-18 Stinger - Optional Strobes

#	DESCRIPTION	PART NUMBER	QUANTITY
1.	3/16" Shear Nut	AN364-1032A	3
2.	3/16" Thick Washer	AN960-10	6
3.	1/8" Aluminum Pop Rivet - Cherry Q	AAPQ-42	4
4.	3/16" Bolt	AN3-5A	3
5.	7/8" Cushioned Tube Clamp	MS21919-DG14	2
6.	Whelen Left Strobe Light	A600-PR	1
7.	Whelen Right Strobe Light	A600-PG	1
8.	10 AMP Fuse	KSES0020-10	1
9.	Navigation Light Tip Mount	NAV-TIP-MT	2
10.	Key Start Switch *	25-6	0
11.	Switch	MS35058-22	2
12.	14 Gauge Eye Terminal, Blue 5/32"	KSES0003	4
13.	14 Gauge Eye Terminal, Blue 3/16"	IP-7102	3
14.	14 Gauge Red Wire	14 GA WIRE/RED	8 ft
15.	14 Gauge, In Line Fuse Holder	KSES0019	2
16.	15 AMP Fuse	KSES0020-15	1
17.	Terminal Y Connector, Brass	IP-YC	1
18.	14 Gauge Female Spade Terminal, Blue	IP-7128	6
19.	14 Gauge Male Spade Terminal, Blue	IP-7126	3
20.	14 Gauge Yellow Wire	14 GA WIRE/YELLOW	50 ft
21.	Whelen Installation & Cable	HD-60	1
22.	14 Gauge Splice, Butt Connector	IP-7132	4
23.	14 Gauge Eye Terminal, Blue 1/4"	1/4 EYE 14 GA	2
24.	Whelen Strobe Light Power Supply	A413A, HDA-DF	1
25.	8/32" Truss Head Bolt	AN515-8R7	6
26.	3/4" Cushioned Tube Clamp	MS21919-DG12	1

*Referenced from S-18 Electrical Schematics.